ZZZ1
PCB

PJP1
14W_DCIN
14W_45@

PJP1
15W_DCIN
15W_45@

12/21 Add PJP1 for DCIN Cable on 45 Level
One for 14W DCIN , PN: DC301001Y00
Another for 15W DCIN , PN: DC301001V00

Compal Confidential

IFTxx Schematics Document

Intel Merom Processor with Crestline + DDRII + ICH8M

(With nVIDIA MXM/B)

2006-1-31

REV: 0.3

Security Classification	Compal Secret Data		
Issued Date	2006/08/18	Deciphered Date	2007/8/18

THIS SHEET OF ENGINEERING DRAWING IS THE PROPRIETARY PROPERTY OF COMPAL ELECTRONICS, INC. AND CONTAINS CONFIDENTIAL AND TRADE SECRET INFORMATION. THIS SHEET MAY NOT BE TRANSFERED FROM THE CUSTODY OF THE COMPETENT DIVISION OF R&D DEPARTMENT EXCEPT AS AUTHORIZED BY COMPAL ELECTRONICS, INC. NEITHER THIS SHEET NOR THE INFORMATION IT CONTAINS MAY BE USED BY OR DISCLOSED TO ANY THIRD PARTY WITHOUT PRIOR WRITTEN CONSENT OF COMPAL ELECTRONICS, INC.

Compal Electronics, Inc.

Title: Cover Page

Size: B | Document Number: IFTXX M/B LA-3541P Schematic | Rev: 0.3

Date: Friday, February 09, 2007 | Sheet 1 of 53

Compal Confidential

Model Name : IFTXX
File Name : LA-3541P

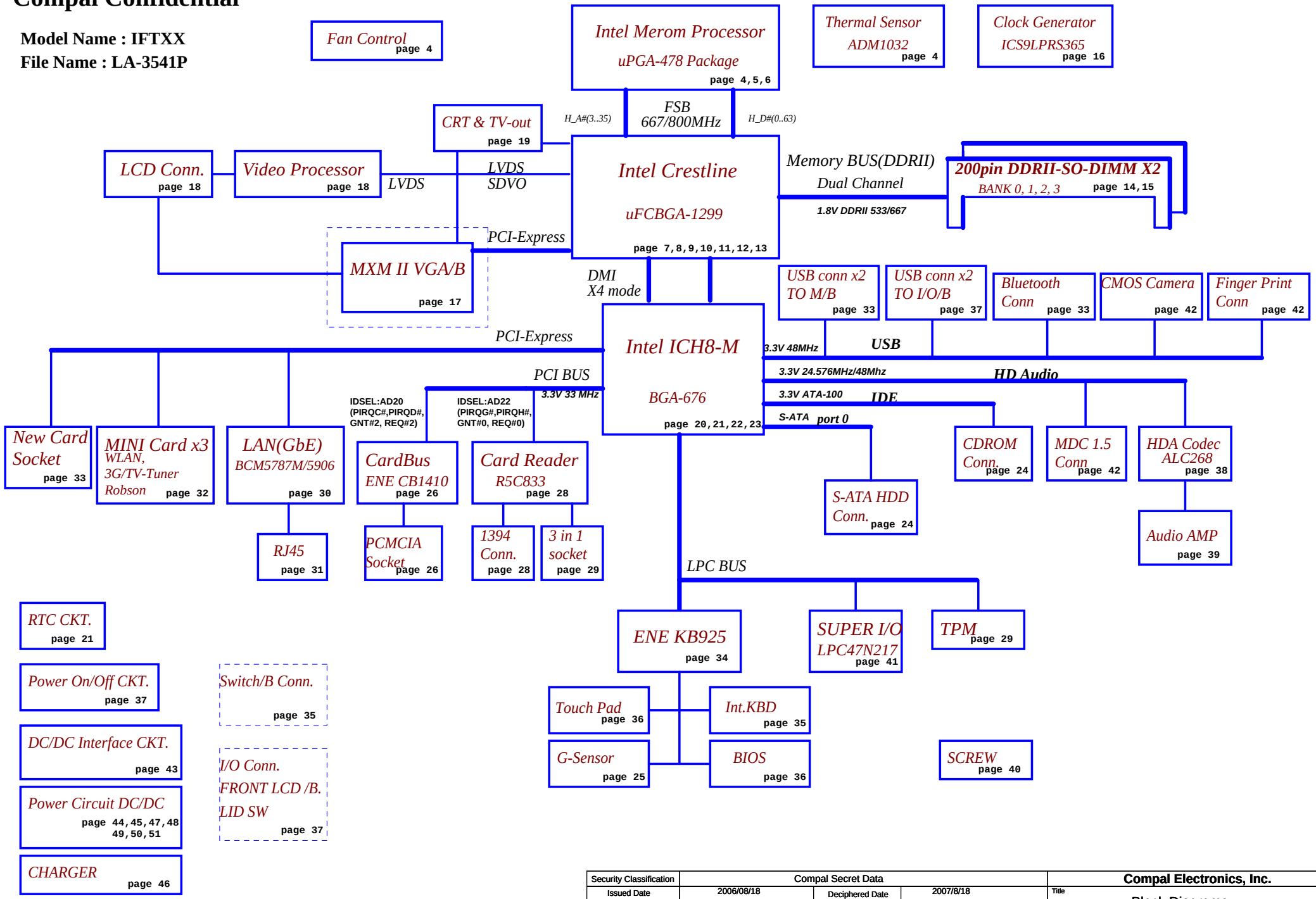

Security Classification	Compal Secret Data		
Issued Date	2006/08/18	Deciphered Date	2007/8/18

THIS SHEET OF ENGINEERING DRAWING IS THE PROPRIETARY PROPERTY OF COMPAL ELECTRONICS, INC. AND CONTAINS CONFIDENTIAL AND TRADE SECRET INFORMATION. THIS SHEET MAY NOT BE TRANSFERED FROM THE CUSTODY OF THE COMPETENT DIVISION OF R&D DEPARTMENT EXCEPT AS AUTHORIZED BY COMPAL ELECTRONICS, INC. NEITHER THIS SHEET NOR THE INFORMATION IT CONTAINS MAY BE USED BY OR DISCLOSED TO ANY THIRD PARTY WITHOUT PRIOR WRITTEN CONSENT OF COMPAL ELECTRONICS, INC.

Compal Electronics, Inc.

Title: Block Diagrams

Size: B | Document Number: IFTXX M/B LA-3541P Schematic | Rev: 0.2

Date: Thursday, February 08, 2007 | Sheet 2 of 53

Voltage Rails

Power Plane	Description	S1	S3	S5
VIN	Adapter power supply (19V)	N/A	N/A	N/A
B+	AC or battery power rail for power circuit.	N/A	N/A	N/A
+CPU_CORE	Core voltage for CPU	ON	OFF	OFF
+0.9VS (Actual +0.9V)	0.9V switched power rail for DDR terminator	ON	ON	OFF
+1.05VS	1.05V switched power rail	ON	OFF	OFF
+1.25VS	1.25V switched power rail	ON	OFF	OFF
+1.5VS	1.5V switched power rail	ON	OFF	OFF
+1.8V	1.8V power rail for DDR	ON	ON	OFF
+1.8VS	1.8V switched power rail	ON	OFF	OFF
+2.5VS	2.5V switched power rail	ON	OFF	OFF
+3VALW	3.3V always on power rail	ON	ON	ON*
+3VS	3.3V switched power rail	ON	OFF	OFF
+5VALW	5V always on power rail	ON	ON	ON*
+5VS	5V switched power rail	ON	OFF	OFF
+VSB	VSB always on power rail	ON	ON	ON*
+RTCVCC	RTC power	ON	ON	ON

STATE \ SIGNAL	SLP_S1#	SLP_S3#	SLP_S4#	SLP_S5#	+VALW	+V	+VS	Clock
Full ON	HIGH	HIGH	HIGH	HIGH	ON	ON	ON	ON
S1(Power On Suspend)	LOW	HIGH	HIGH	HIGH	ON	ON	ON	LOW
S3 (Suspend to RAM)	LOW	LOW	HIGH	HIGH	ON	ON	OFF	OFF
S4 (Suspend to Disk)	LOW	LOW	LOW	HIGH	ON	OFF	OFF	OFF
S5 (Soft OFF)	LOW	LOW	LOW	LOW	ON	OFF	OFF	OFF

PROJECT ID Table

	ID1	ID0
IFT00 (00@)	R284	R283
IFT01 (01@)	R284	R281
IFL90 (10@)	R694	R283
IFT91 (11@)	R694	R281

BOARD ID Table

R	Structure
Ra (R743)	15W@
Rb (R740)	14W@

MIC ID Table

R	Structure
R785 Single MIC	INT@
R786 Array MIC	DUAL@

Note : ON* means that this power plane is ON only with AC power available, otherwise it is OFF.

External PCI Devices

DEVICE	IDSEL #	REQ/GNT #	PIRQ
CARD BUS CB1410	AD20	2	C,D
1394+Cardreader	AD22	0	G,H

EC SM Bus1 address

Device	Address
Smart Battery	0001 011X b
EEPROM(24C16/02)	1010 000X b

EC SM Bus2 address

Device	Address
ADI ADM1032	1001 100X b
NVIDIA NB8X	

ICH8M SM Bus address

Device	Address
Clock Generator (ICS9LPRS325AKLFT_MLF72)	1101 001Xb
DDR DIMM0	1010 000Xb
DDR DIMM1	1010 010Xb

SKU ID Table

Vcc	3.3V +/- 5%
Rb	47K +/- 5%

Rb~ R740
Ra~ R743

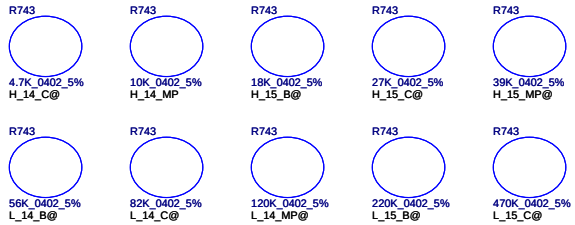

Board ID	Rb	Ra	V_{AD_BID} min	V_{AD_BID} typ	V_{AD_BID} max	Ra BOM Structure
1	NA	4.7K +/- 5%	0 V	0 V	0 V	H_14_B@
2	47K(RB@)	4.7K +/- 5%	0.274 V	0.300 V	0.328 V	H_14_C@ ✓
3	47K(RB@)	10K +/- 5%	0.553V	0.578 V	0.628 V	H_14_MP@
4	47K(RB@)	18K +/- 5%	0.849V	0.913V	0.981 V	H_15_B@
5	47K(RB@)	27K +/- 5%	1.129 V	1.204 V	1.282 V	H_15_C@ ✓
6	47K(RB@)	39K +/- 5%	1.415 V	1.496 V	1.579 V	H_15_MP@
7	47K(RB@)	56K +/- 5%	1.712 V	1.794 V	1.876 V	L_14_B@
8	47K(RB@)	82K +/- 5%	2.020V	2.097 V	2.173 V	L_14_C@ ✓
9	47K(RB@)	120K +/- 5%	2.303 V	2.371 V	2.437 V	L_14_MP@
10	47K(RB@)	220K +/- 5%	2.670 V	2.719 V	2.765 V	L_15_B@
11	47K(RB@)	470K +/- 5%	2.972 V	3.000 V	3.026 V	L_15_C@ ✓
12	47K(RB@)	NA	3.135 V	3.300 V	3.465 V	NA for L_15_MP

Security Classification: Compal Secret Data
Issued Date: 2006/08/18 Deciphered Date: 2007/8/18

THIS SHEET OF ENGINEERING DRAWING IS THE PROPRIETARY PROPERTY OF COMPAL ELECTRONICS, INC. AND CONTAINS CONFIDENTIAL AND TRADE SECRET INFORMATION. THIS SHEET MAY NOT BE TRANSFERED FROM THE CUSTODY OF THE COMPETENT DIVISION OF R&D DEPARTMENT EXCEPT AS AUTHORIZED BY COMPAL ELECTRONICS, INC. NEITHER THIS SHEET NOR THE INFORMATION IT CONTAINS MAY BE USED BY OR DISCLOSED TO ANY THIRD PARTY WITHOUT PRIOR WRITTEN CONSENT OF COMPAL ELECTRONICS, INC.

Compal Electronics, Inc.
Title: Notes List
Size: B | Document Number: IFTXX M/B LA-3541P Schematic | Rev: 0.2
Date: Thursday, February 15, 2007 | Sheet 3 of 53

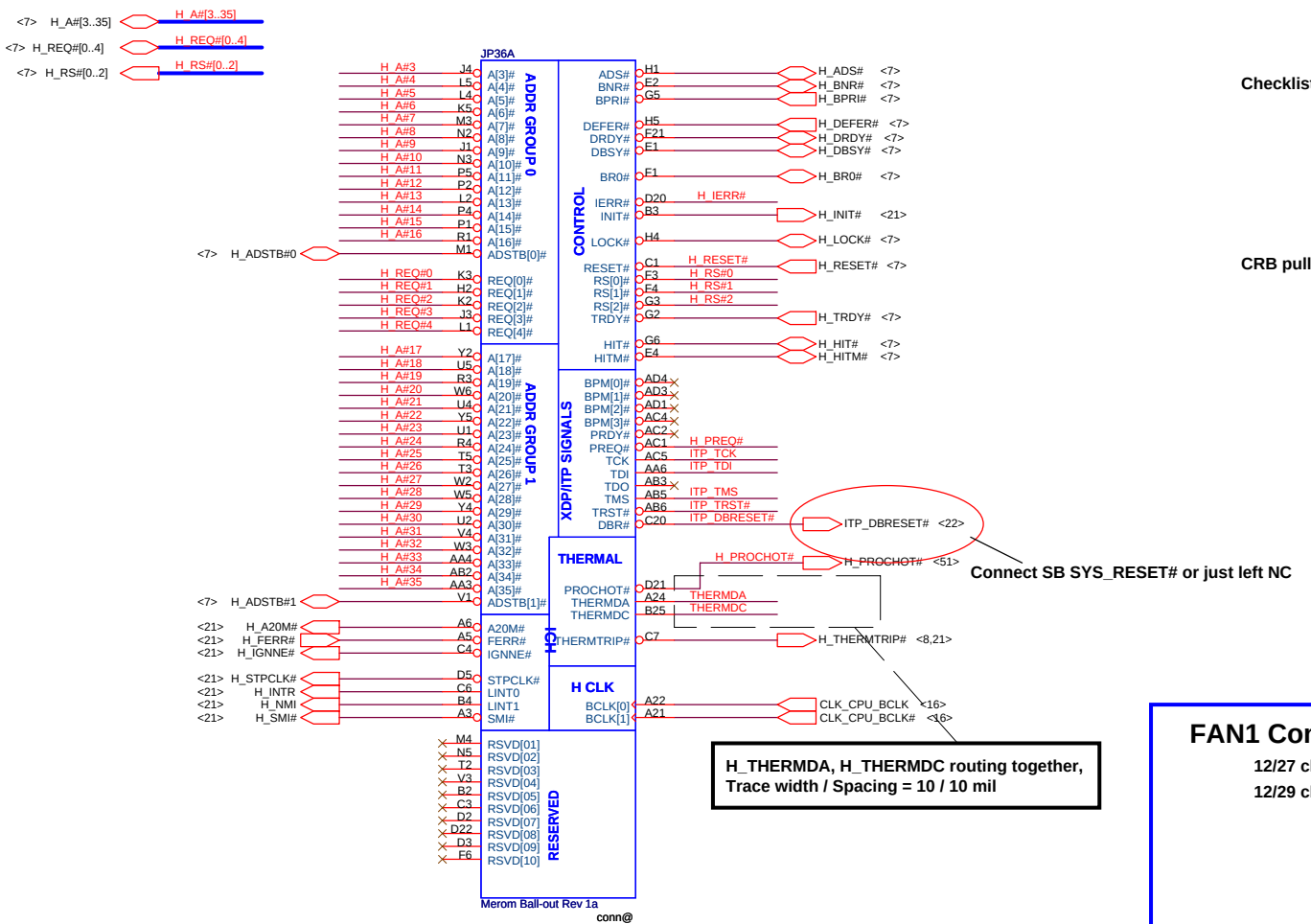

Place close to CPU within 500mil

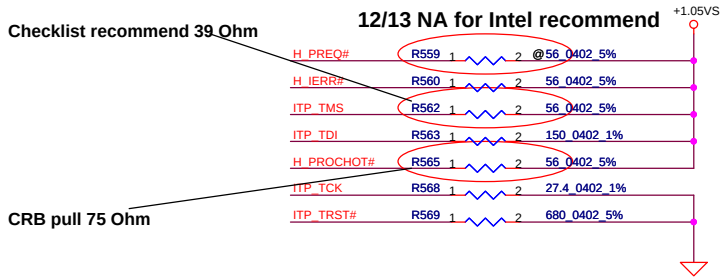

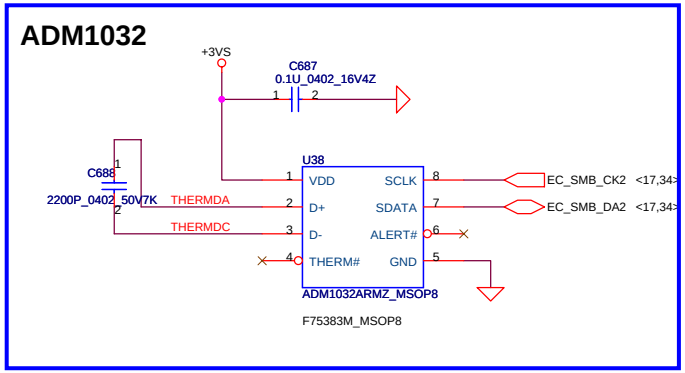

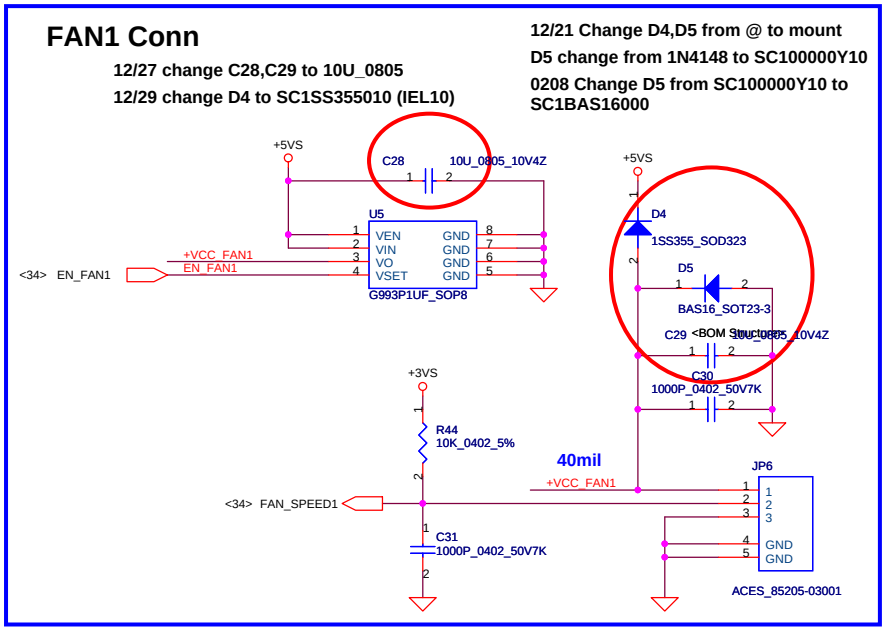

Security Classification	Compal Secret Data		
Issued Date	2006/08/18	Deciphered Date	2007/8/18

THIS SHEET OF ENGINEERING DRAWING IS THE PROPRIETARY PROPERTY OF COMPAL ELECTRONICS, INC. AND CONTAINS CONFIDENTIAL AND TRADE SECRET INFORMATION. THIS SHEET MAY NOT BE TRANSFERED FROM THE CUSTODY OF THE COMPETENT DIVISION OF R&D DEPARTMENT EXCEPT AS AUTHORIZED BY COMPAL ELECTRONICS, INC. NEITHER THIS SHEET NOR THE INFORMATION IT CONTAINS MAY BE USED BY OR DISCLOSED TO ANY THIRD PARTY WITHOUT PRIOR WRITTEN CONSENT OF COMPAL ELECTRONICS, INC.

Compal Electronics, Inc.

Title: Merom (1/3)

Size: B | Document Number: IFTXX M/B LA-3541P Schematic | Rev: 0

Date: Thursday, February 15, 2007 | Sheet 4 of 53

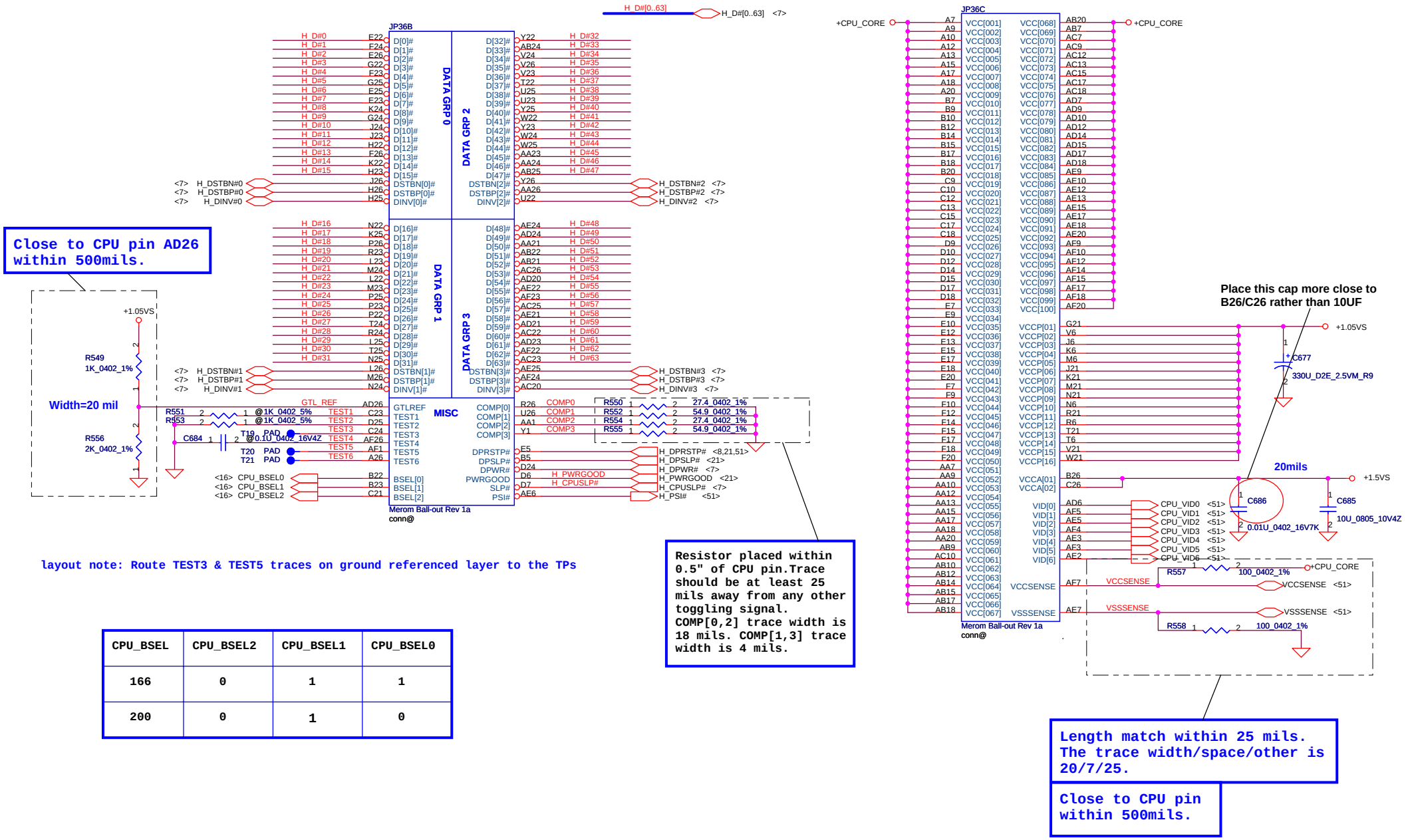

layout note: Route TEST3 & TEST5 traces on ground referenced layer to the TPs

CPU_BSEL	CPU_BSEL2	CPU_BSEL1	CPU_BSEL0
166	0	1	1
200	0	1	0

Security Classification	Compal Secret Data		
Issued Date	2006/08/18	Deciphered Date	2007/8/18

THIS SHEET OF ENGINEERING DRAWING IS THE PROPRIETARY PROPERTY OF COMPAL ELECTRONICS, INC. AND CONTAINS CONFIDENTIAL AND TRADE SECRET INFORMATION. THIS SHEET MAY NOT BE TRANSFERED FROM THE CUSTODY OF THE COMPETENT DIVISION OF R&D DEPARTMENT EXCEPT AS AUTHORIZED BY COMPAL ELECTRONICS, INC. NEITHER THIS SHEET NOR THE INFORMATION IT CONTAINS MAY BE USED BY OR DISCLOSED TO ANY THIRD PARTY WITHOUT PRIOR WRITTEN CONSENT OF COMPAL ELECTRONICS, INC.

Compal Electronics, Inc.

Title: Merom (2/3)

Size: B | Document Number: IFTXX M/B LA-3541P Schematic | Rev: 0

Date: Friday, February 09, 2007 | Sheet 5 of 53

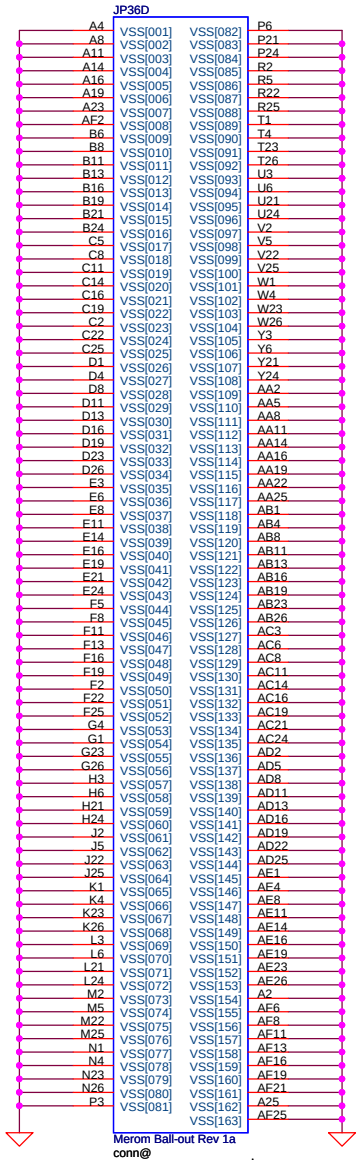

+CPU-CORE Decoupling	C,uF	ESR, mohm	ESL,nH
SPCAP,Polymer	6X330uF	9m ohm/6	1.8nH/6
MLCC 0805 X5R	32X22uF 32X10uF	3m ohm/32 3m ohm/32	0.6nH/32 0.6nH/32

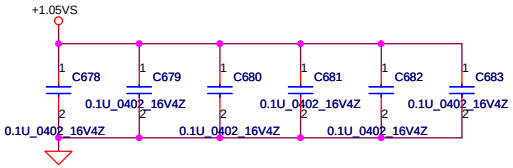

Security Classification	Compal Secret Data		
Issued Date	2006/08/18	Deciphered Date	2007/8/18

THIS SHEET OF ENGINEERING DRAWING IS THE PROPRIETARY PROPERTY OF COMPAL ELECTRONICS, INC. AND CONTAINS CONFIDENTIAL AND TRADE SECRET INFORMATION. THIS SHEET MAY NOT BE TRANSFERED FROM THE CUSTODY OF THE COMPETENT DIVISION OF R&D DEPARTMENT EXCEPT AS AUTHORIZED BY COMPAL ELECTRONICS, INC. NEITHER THIS SHEET NOR THE INFORMATION IT CONTAINS MAY BE USED BY OR DISCLOSED TO ANY THIRD PARTY WITHOUT PRIOR WRITTEN CONSENT OF COMPAL ELECTRONICS, INC.

Compal Electronics, Inc.

Title: Merom (3/3)

Size: B | Document Number: IFTXX M/B LA-3541P Schematic | Rev: 0

Date: Thursday, February 08, 2007 | Sheet 6 of 53

1/2 change U37 PM part number to SA00001DJ90

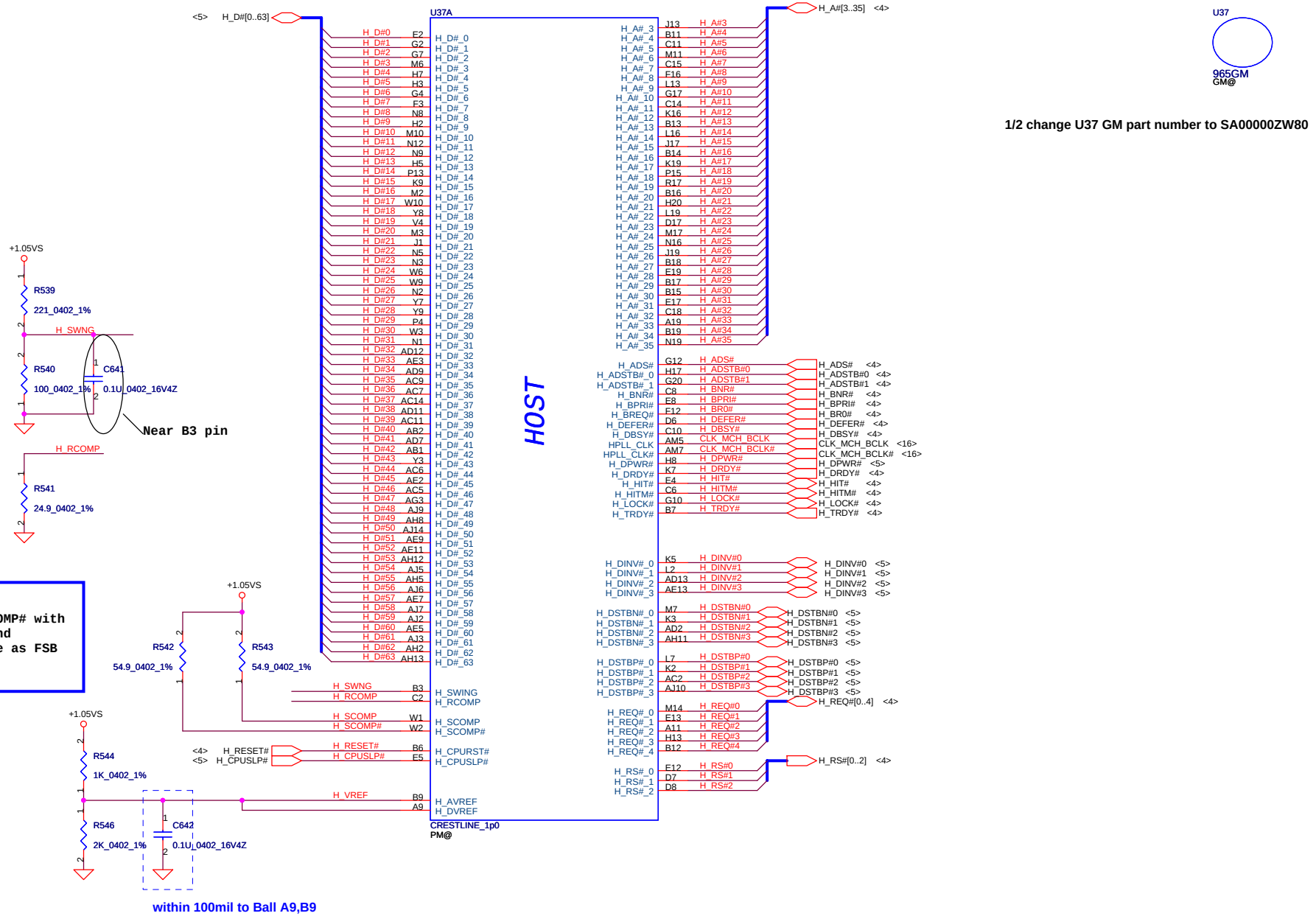

1/2 change U37 GM part number to SA00000ZW80

within 100mil to Ball A9,B9

layout note:
Route H_SCOMP and H_SCOMP# with trace width, spacing and impedance (55 ohm) same as FSB data traces

Layout Note:
H_RCOMP / H_VREF / H_SWNG
trace width and spacing is 10/20

Security Classification	Compal Secret Data		
Issued Date	2006/08/18	Deciphered Date	2007/8/18

THIS SHEET OF ENGINEERING DRAWING IS THE PROPRIETARY PROPERTY OF COMPAL ELECTRONICS, INC. AND CONTAINS CONFIDENTIAL AND TRADE SECRET INFORMATION. THIS SHEET MAY NOT BE TRANSFERED FROM THE CUSTODY OF THE COMPETENT DIVISION OF R&D DEPARTMENT EXCEPT AS AUTHORIZED BY COMPAL ELECTRONICS, INC. NEITHER THIS SHEET NOR THE INFORMATION IT CONTAINS MAY BE USED BY OR DISCLOSED TO ANY THIRD PARTY WITHOUT PRIOR WRITTEN CONSENT OF COMPAL ELECTRONICS, INC.

Compal Electronics, Inc.

Title: Crestline (1/7)-GTL

Size: B | Document Number: IFTXX M/B LA-3541P Schematic | Rev: 0

Date: Friday, February 09, 2007 | Sheet 7 of 53

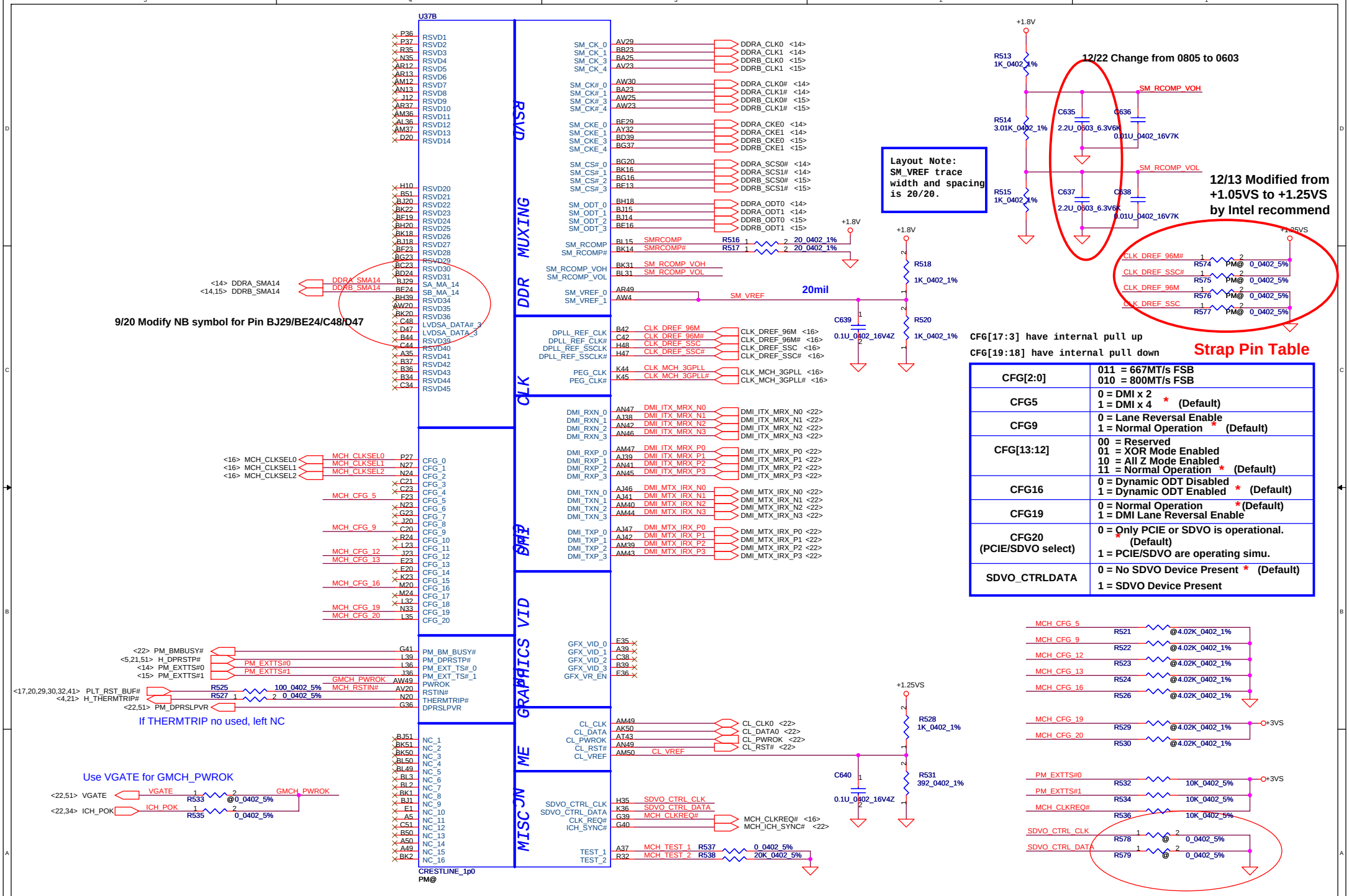

CFG[2:0]	011 = 667MT/s FSB 010 = 800MT/s FSB
CFG5	0 = DMI x 2 1 = DMI x 4 * (Default)
CFG9	0 = Lane Reversal Enable 1 = Normal Operation * (Default)
CFG[13:12]	00 = Reserved 01 = XOR Mode Enabled 10 = All Z Mode Enabled 11 = Normal Operation * (Default)
CFG16	0 = Dynamic ODT Disabled 1 = Dynamic ODT Enabled * (Default)
CFG19	0 = Normal Operation *(Default) 1 = DMI Lane Reversal Enable
CFG20 (PCIE/SDVO select)	0 = Only PCIE or SDVO is operational. * (Default) 1 = PCIE/SDVO are operating simu.
SDVO_CTRLDATA	0 = No SDVO Device Present * (Default) 1 = SDVO Device Present

Security Classification	Compal Secret Data		
Issued Date	2006/08/18	Deciphered Date	2007/8/18

THIS SHEET OF ENGINEERING DRAWING IS THE PROPRIETARY PROPERTY OF COMPAL ELECTRONICS, INC. AND CONTAINS CONFIDENTIAL AND TRADE SECRET INFORMATION. THIS SHEET MAY NOT BE TRANSFERED FROM THE CUSTODY OF THE COMPETENT DIVISION OF R&D DEPARTMENT EXCEPT AS AUTHORIZED BY COMPAL ELECTRONICS, INC. NEITHER THIS SHEET NOR THE INFORMATION IT CONTAINS MAY BE USED BY OR DISCLOSED TO ANY THIRD PARTY WITHOUT PRIOR WRITTEN CONSENT OF COMPAL ELECTRONICS, INC.

Compal Electronics, Inc.

Title: Crestline (2/7)-DMI/DDR

Size: Custom | Document Number: IFTXX M/B LA-3541P Schematic | Rev: 0

Date: Friday, February 09, 2007 | Sheet 8 of 53

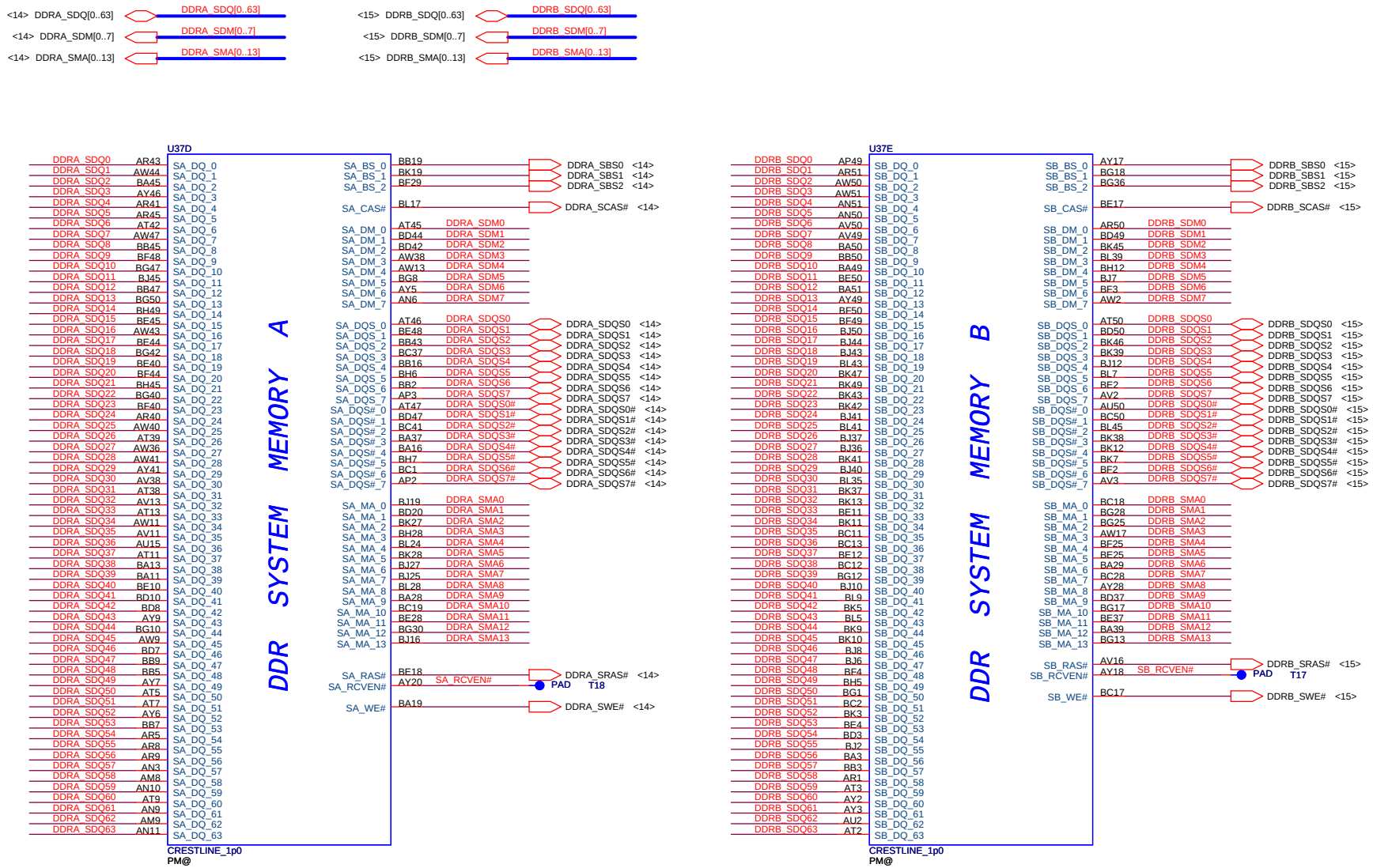

Security Classification	Compal Secret Data		
Issued Date	2006/08/18	Deciphered Date	2007/8/18

THIS SHEET OF ENGINEERING DRAWING IS THE PROPRIETARY PROPERTY OF COMPAL ELECTRONICS, INC. AND CONTAINS CONFIDENTIAL AND TRADE SECRET INFORMATION. THIS SHEET MAY NOT BE TRANSFERED FROM THE CUSTODY OF THE COMPETENT DIVISION OF R&D DEPARTMENT EXCEPT AS AUTHORIZED BY COMPAL ELECTRONICS, INC. NEITHER THIS SHEET NOR THE INFORMATION IT CONTAINS MAY BE USED BY OR DISCLOSED TO ANY THIRD PARTY WITHOUT PRIOR WRITTEN CONSENT OF COMPAL ELECTRONICS, INC.

Compal Electronics, Inc.

Title: Crestline (3/7)-DDRII

Size: B | Document Number: IFTXX M/B LA-3541P Schematic | Rev: 0

Date: Thursday, February 08, 2007 | Sheet 9 of 53

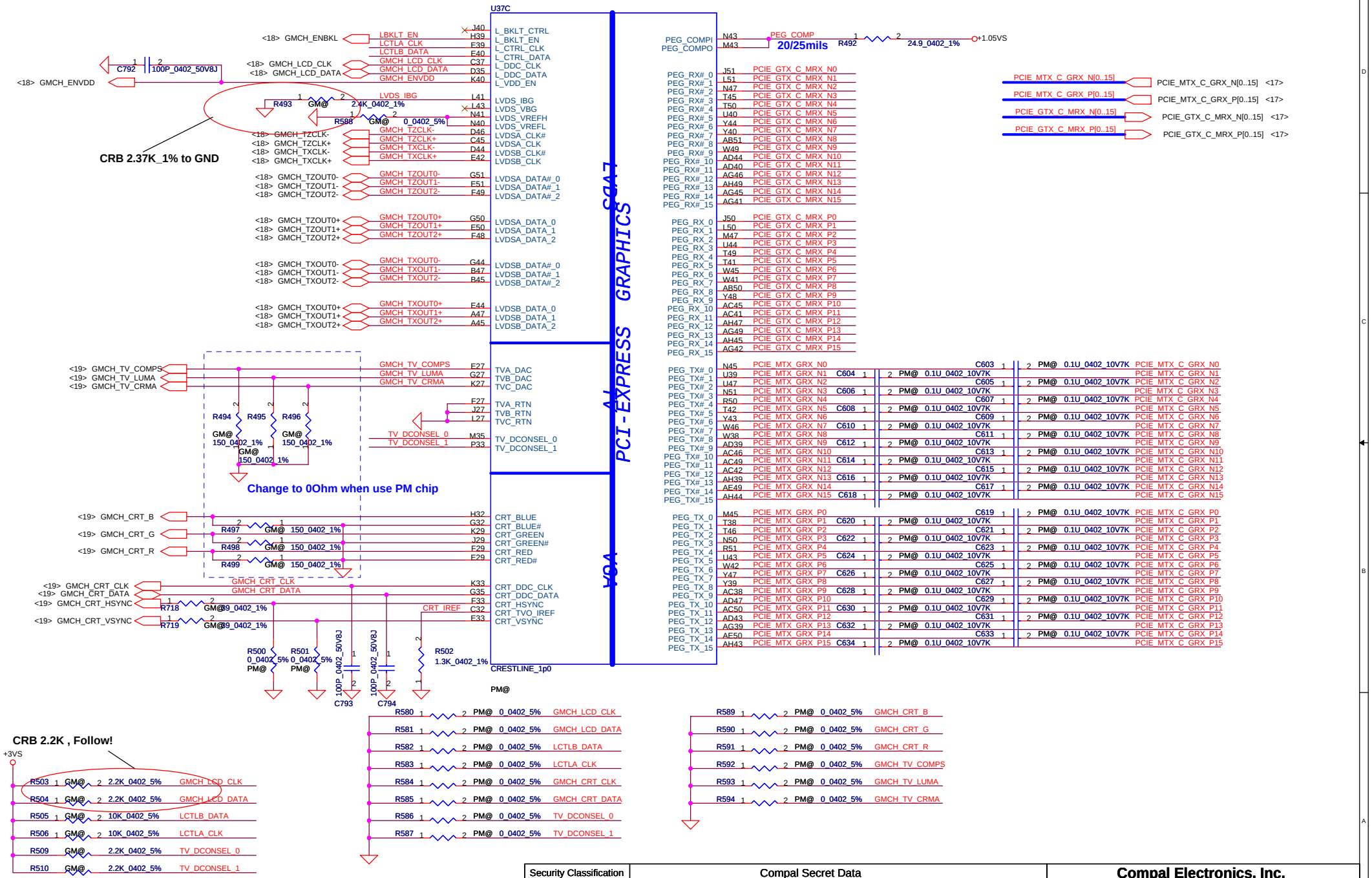

Security Classification	Compal Secret Data		
Issued Date	2006/08/18	Deciphered Date	2007/8/18

THIS SHEET OF ENGINEERING DRAWING IS THE PROPRIETARY PROPERTY OF COMPAL ELECTRONICS, INC. AND CONTAINS CONFIDENTIAL AND TRADE SECRET INFORMATION. THIS SHEET MAY NOT BE TRANSFERED FROM THE CUSTODY OF THE COMPETENT DIVISION OF R&D DEPARTMENT EXCEPT AS AUTHORIZED BY COMPAL ELECTRONICS, INC. NEITHER THIS SHEET NOR THE INFORMATION IT CONTAINS MAY BE USED BY OR DISCLOSED TO ANY THIRD PARTY WITHOUT PRIOR WRITTEN CONSENT OF COMPAL ELECTRONICS, INC.

Compal Electronics, Inc.

Title: Crestline (4/7)-VGA/LVDS/TV

Size: B | Document Number: IFTXX M/B LA-3541P Schematic | Rev: 0

Date: Friday, February 09, 2007 | Sheet 10 of 53

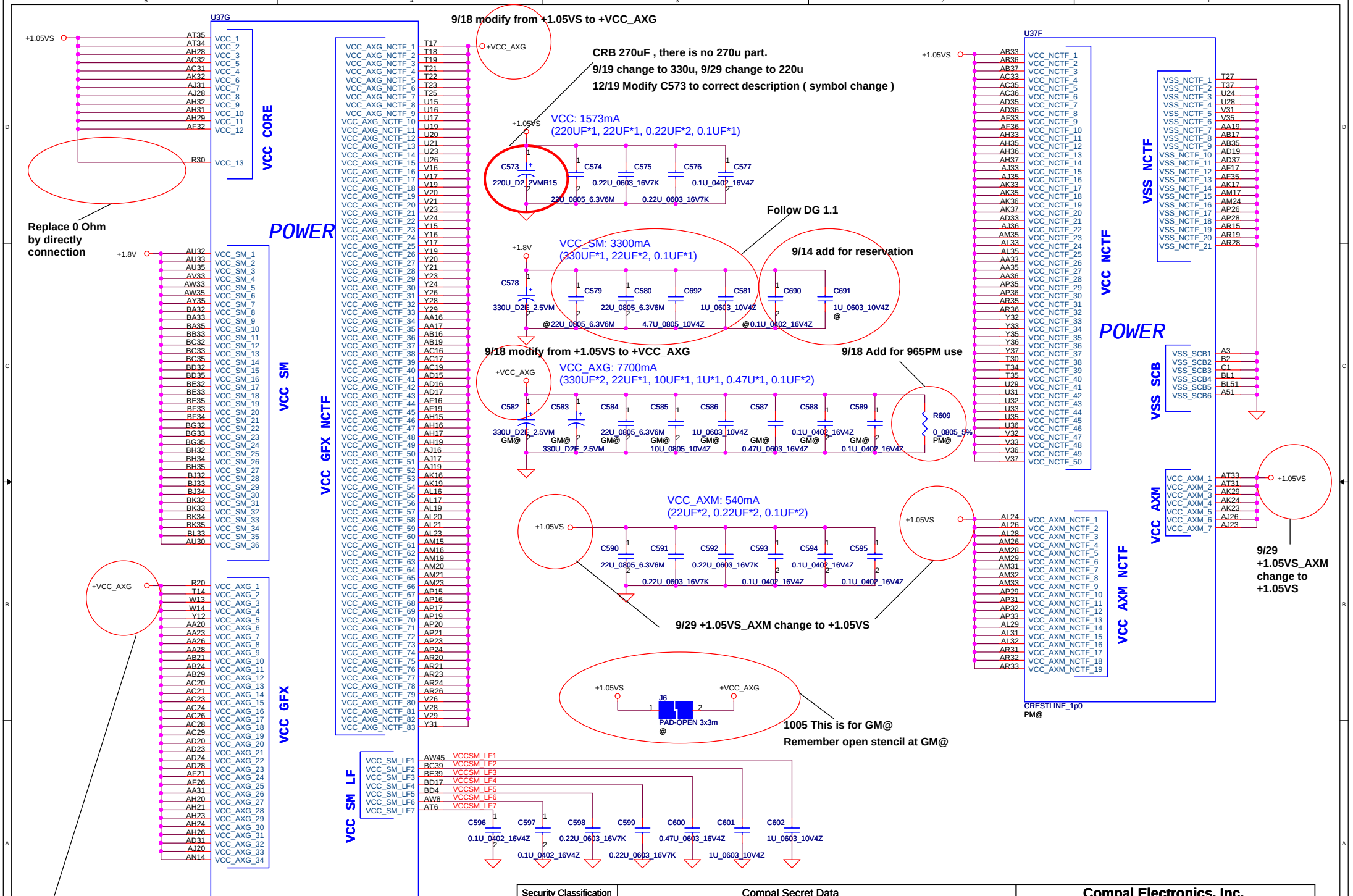

Security Classification	Compal Secret Data		
Issued Date	2006/08/18	Deciphered Date	2007/8/18

THIS SHEET OF ENGINEERING DRAWING IS THE PROPRIETARY PROPERTY OF COMPAL ELECTRONICS, INC. AND CONTAINS CONFIDENTIAL AND TRADE SECRET INFORMATION. THIS SHEET MAY NOT BE TRANSFERED FROM THE CUSTODY OF THE COMPETENT DIVISION OF R&D DEPARTMENT EXCEPT AS AUTHORIZED BY COMPAL ELECTRONICS, INC. NEITHER THIS SHEET NOR THE INFORMATION IT CONTAINS MAY BE USED BY OR DISCLOSED TO ANY THIRD PARTY WITHOUT PRIOR WRITTEN CONSENT OF COMPAL ELECTRONICS, INC.

Compal Electronics, Inc.

Title: Crestline (5/7)-VCC

Size: B | Document Number: IFTXX M/B LA-3541P Schematic | Rev: 0

Date: Thursday, February 08, 2007 | Sheet 11 of 53

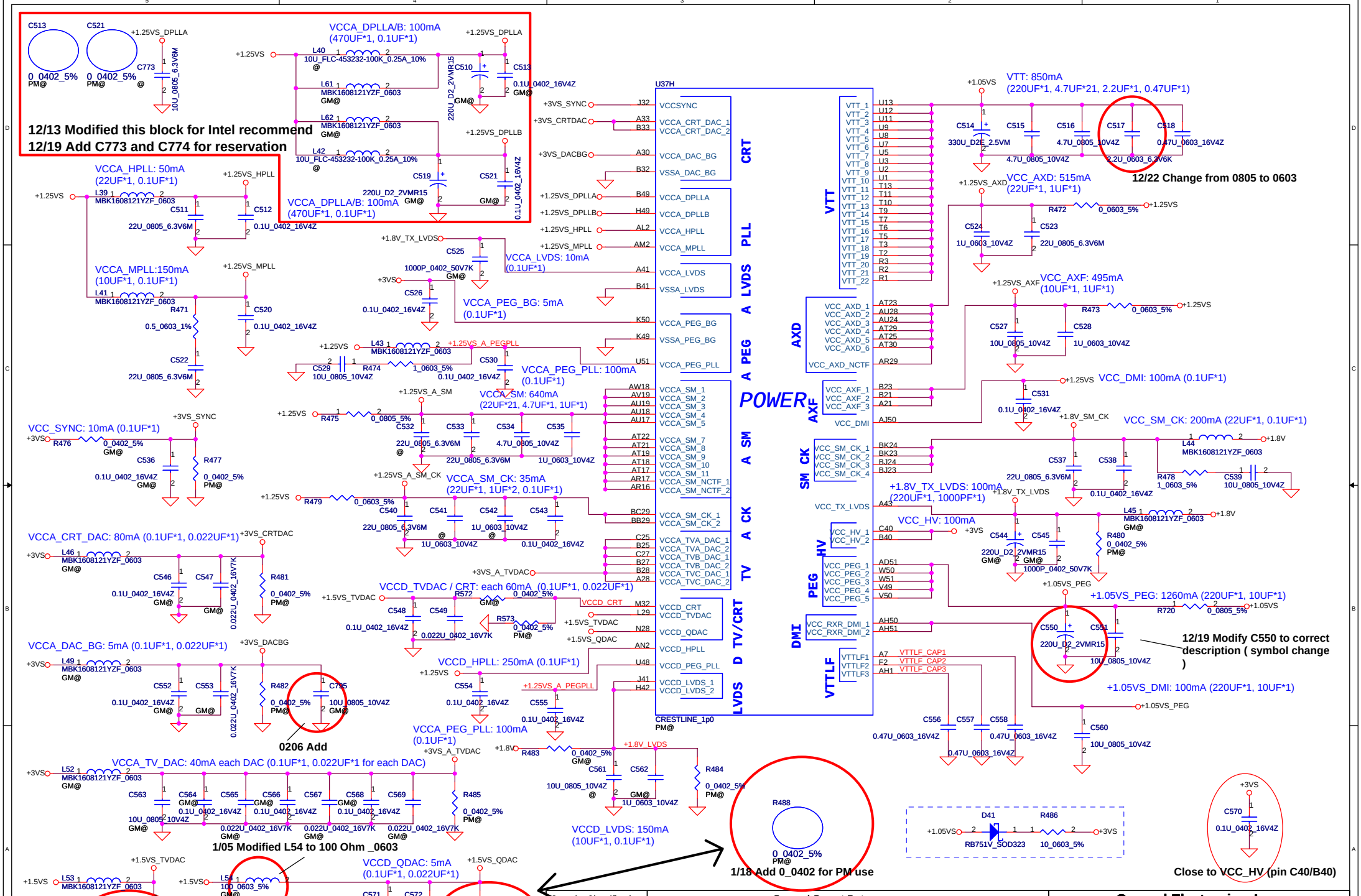
12/13 Modified this block for Intel recommend
12/19 Add C773 and C774 for reservation
VCCA_DPLLA/B: 100mA (470UF*1, 0.1UF*1)
VCCA_HPLL: 50mA (22UF*1, 0.1UF*1)
VCCA_MPLL:150mA (10UF*1, 0.1UF*1)
VCCA_LVDS: 10mA (0.1UF*1)
VCCA_PEG_BG: 5mA (0.1UF*1)
VCCA_PEG_PLL: 100mA (0.1UF*1)
VCCA_SM: 640mA (22UF*21, 4.7UF*1, 1UF*1)
VCC_SYNC: 10mA (0.1UF*1)
VCCA_SM_CK: 35mA (22UF*1, 1UF*2, 0.1UF*1)
VCCA_CRT_DAC: 80mA (0.1UF*1, 0.022UF*1)
VCCD_TVDAC / CRT: each 60mA (0.1UF*1, 0.022UF*1)
VCCA_DAC_BG: 5mA (0.1UF*1, 0.022UF*1)
VCCD_HPLL: 250mA (0.1UF*1)
VCCA_PEG_PLL: 100mA (0.1UF*1)
VCCA_TV_DAC: 40mA each DAC (0.1UF*1, 0.022UF*1 for each DAC)
VCCD_LVDS: 150mA (10UF*1, 0.1UF*1)
VCCD_QDAC: 5mA (0.1UF*1, 0.022UF*1)
0206 Add
1/05 Modified L54 to 100 Ohm _0603
1/18 Add 0_0402 for PM use
1/18 Change from PM@ to @
1/05 Modified R488 to 1U_0402
VTT: 850mA (220UF*1, 4.7UF*21, 2.2UF*1, 0.47UF*1)
12/22 Change from 0805 to 0603
VCC_AXD: 515mA (22UF*1, 1UF*1)
VCC_AXF: 495mA (10UF*1, 1UF*1)
VCC_DMI: 100mA (0.1UF*1)
VCC_SM_CK: 200mA (22UF*1, 0.1UF*1)
+1.8V_TX_LVDS: 100mA (220UF*1, 1000PF*1)
VCC_HV: 100mA
+1.05VS_PEG: 1260mA (220UF*1, 10UF*1)
+1.05VS_DMI: 100mA (220UF*1, 10UF*1)
12/19 Modify C550 to correct description (symbol change)
Close to VCC_HV (pin C40/B40)
U37H
CRESTLINE_1p0
PM@
POWER
CRT
PLL
LVDS
PEG
SM
CK
TV
TV/CRT
VTT
AXD
AXF
SM CK
PEG HV
DMI
VTTLF
R488
0_0402_5%
PM@
D41
RB751V_SOD323
R486
10_0603_5%
Security Classification
Compal Secret Data
Issued Date
2006/08/18
Deciphered Date
2007/8/18
THIS SHEET OF ENGINEERING DRAWING IS THE PROPRIETARY PROPERTY OF COMPAL ELECTRONICS, INC. AND CONTAINS CONFIDENTIAL AND TRADE SECRET INFORMATION. THIS SHEET MAY NOT BE TRANSFERED FROM THE CUSTODY OF THE COMPETENT DIVISION OF R&D DEPARTMENT EXCEPT AS AUTHORIZED BY COMPAL ELECTRONICS, INC. NEITHER THIS SHEET NOR THE INFORMATION IT CONTAINS MAY BE USED BY OR DISCLOSED TO ANY THIRD PARTY WITHOUT PRIOR WRITTEN CONSENT OF COMPAL ELECTRONICS, INC.
Compal Electronics, Inc.
Title
Crestline (6/7)-VCC
Size B
Document Number
IFTXX M/B LA-3541P Schematic
Rev 0
Date: Friday, February 09, 2007
Sheet 12 of 53

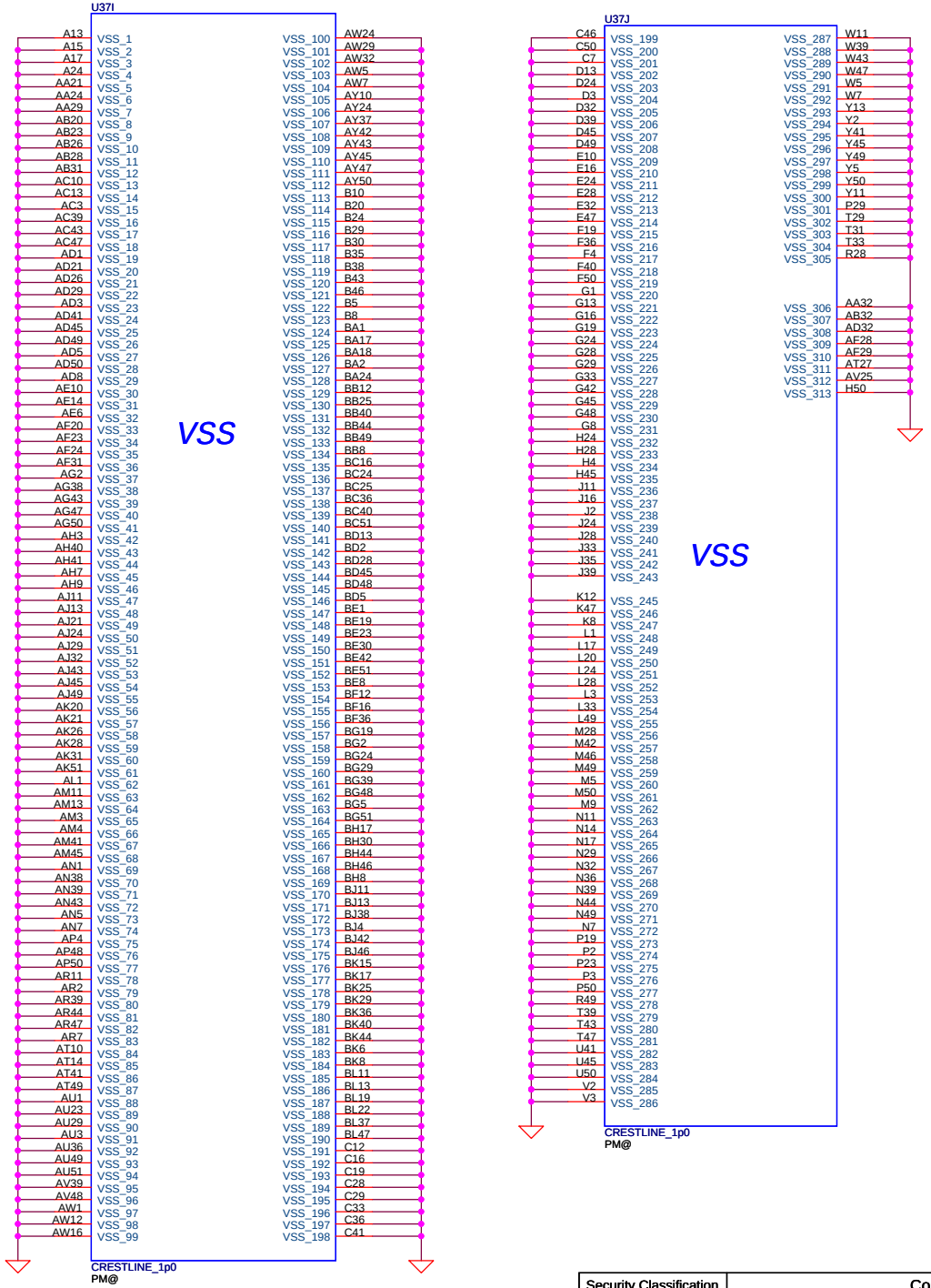

Security Classification	Compal Secret Data			Compal Electronics, Inc.
Issued Date	2006/08/18	Deciphered Date	2007/8/18	Title: Crestline (7/7)-GND

THIS SHEET OF ENGINEERING DRAWING IS THE PROPRIETARY PROPERTY OF COMPAL ELECTRONICS, INC. AND CONTAINS CONFIDENTIAL AND TRADE SECRET INFORMATION. THIS SHEET MAY NOT BE TRANSFERED FROM THE CUSTODY OF THE COMPETENT DIVISION OF R&D DEPARTMENT EXCEPT AS AUTHORIZED BY COMPAL ELECTRONICS, INC. NEITHER THIS SHEET NOR THE INFORMATION IT CONTAINS MAY BE USED BY OR DISCLOSED TO ANY THIRD PARTY WITHOUT PRIOR WRITTEN CONSENT OF COMPAL ELECTRONICS, INC.

Size	Document Number	Rev
B	IFTXX M/B LA-3541P Schematic	0

Date: Thursday, February 08, 2007 | Sheet 13 of 53

9/25 Change DIMM0 to SP070004Z00 (HBL50)

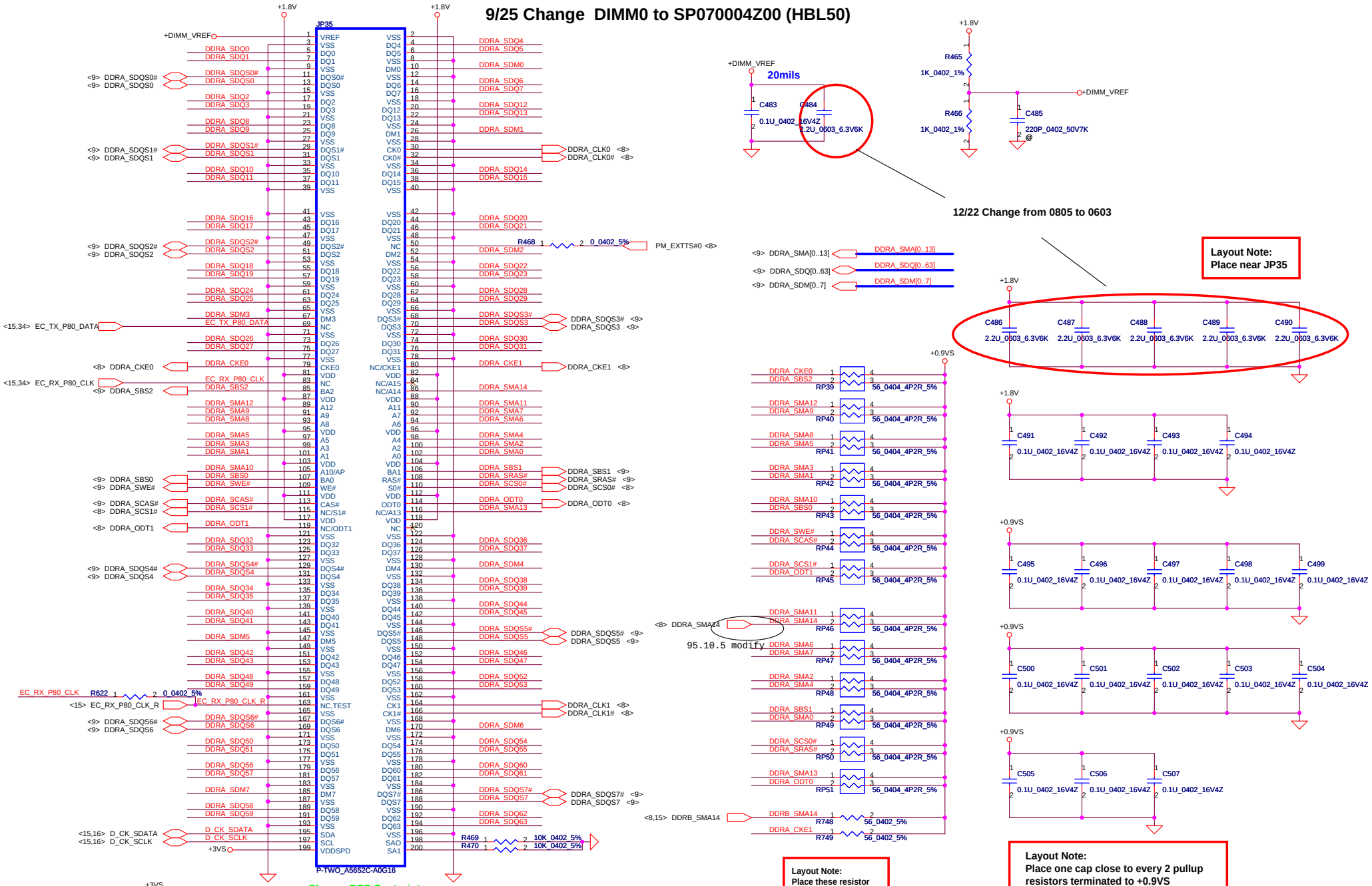

Security Classification	Compal Secret Data		
Issued Date	2006/08/18	Deciphered Date	2007/8/18

THIS SHEET OF ENGINEERING DRAWING IS THE PROPRIETARY PROPERTY OF COMPAL ELECTRONICS, INC. AND CONTAINS CONFIDENTIAL AND TRADE SECRET INFORMATION. THIS SHEET MAY NOT BE TRANSFERED FROM THE CUSTODY OF THE COMPETENT DIVISION OF R&D DEPARTMENT EXCEPT AS AUTHORIZED BY COMPAL ELECTRONICS, INC. NEITHER THIS SHEET NOR THE INFORMATION IT CONTAINS MAY BE USED BY OR DISCLOSED TO ANY THIRD PARTY WITHOUT PRIOR WRITTEN CONSENT OF COMPAL ELECTRONICS, INC.

Compal Electronics, Inc.

Title: DDRII-SODIMM0

Size: B | Document Number: IFTXX M/B LA-3541P Schematic | Rev: 0

Date: Friday, February 09, 2007 | Sheet 14 of 53

9/25 Change DIMM1 to SP070006F00

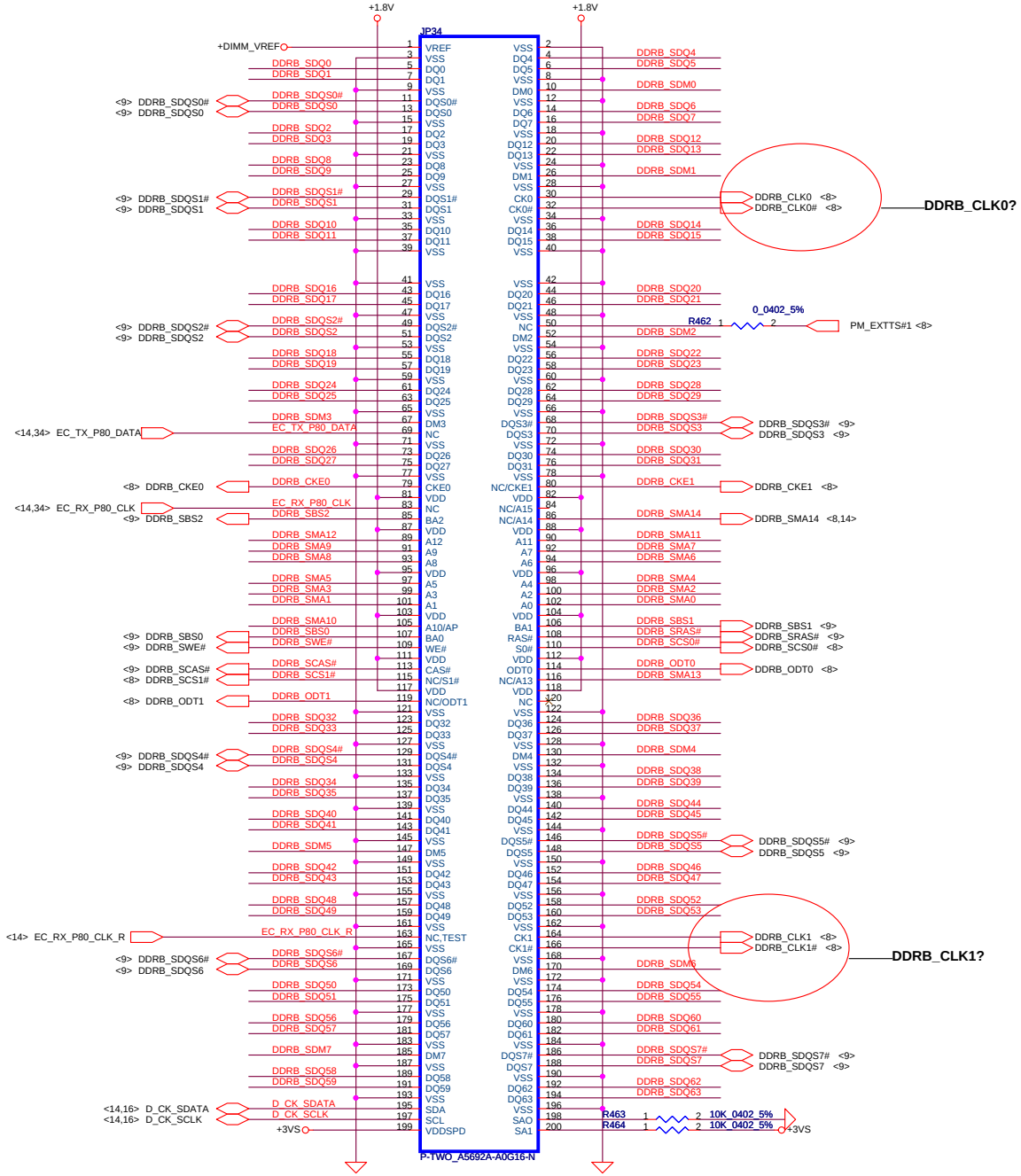

DIMM1 STD H:9.2mm (BOT)

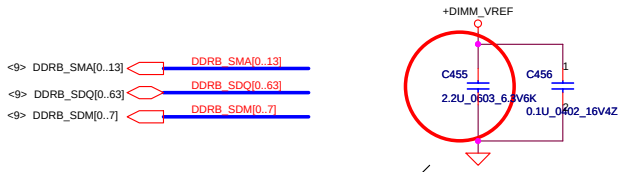

12/22 Change from 0805 to 0603

Layout Note:
Place near JP34

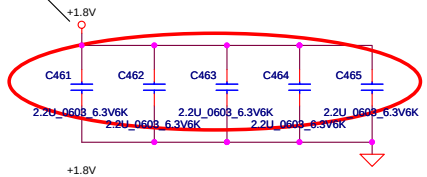

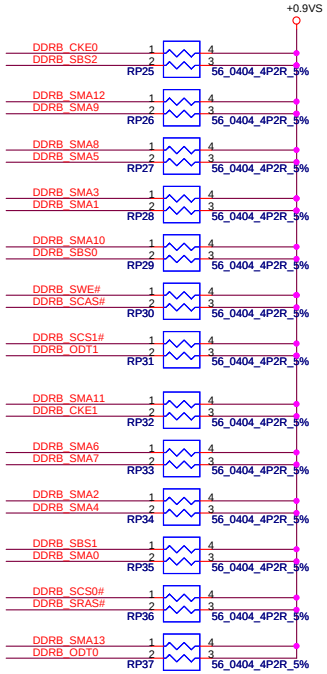

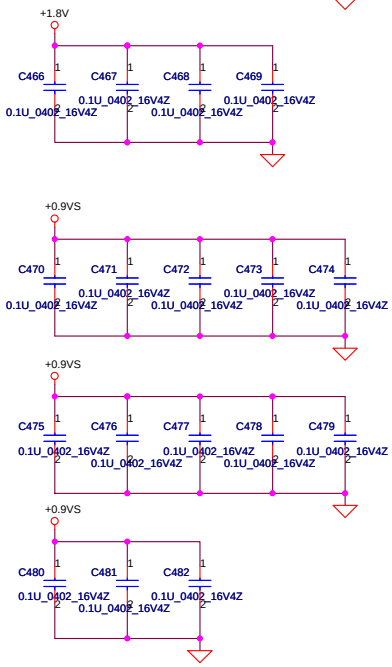

Layout Note:
Place these resistor closely JP35,all trace length Max=1.5"

Layout Note:
Place one cap close to every 2 pullup resistors terminated to +0.9VS

Security Classification	Compal Secret Data		
Issued Date	2006/08/18	Deciphered Date	2007/8/18

THIS SHEET OF ENGINEERING DRAWING IS THE PROPRIETARY PROPERTY OF COMPAL ELECTRONICS, INC. AND CONTAINS CONFIDENTIAL AND TRADE SECRET INFORMATION. THIS SHEET MAY NOT BE TRANSFERED FROM THE CUSTODY OF THE COMPETENT DIVISION OF R&D DEPARTMENT EXCEPT AS AUTHORIZED BY COMPAL ELECTRONICS, INC. NEITHER THIS SHEET NOR THE INFORMATION IT CONTAINS MAY BE USED BY OR DISCLOSED TO ANY THIRD PARTY WITHOUT PRIOR WRITTEN CONSENT OF COMPAL ELECTRONICS, INC.

Compal Electronics, Inc.

Title: DDRII-SODIMM1

Size: B | Document Number: IFTXX M/B LA-3541P Schematic | Rev: 0

Date: Friday, February 09, 2007 | Sheet 15 of 53

FSLC CLKSEL2	FSLB CLKSEL1	FSLA CLKSEL0	CPU MHz	SRC MHz	PCI MHz
0	1	0	200	100	33.3
0	1	1	166	100	33.3

FSB Frequency Selet:

CPU Driven	Stuff						
*(Default)	No Stuff	R401	R408	R417	R430	R438	R447
667MHz	Stuff	R401	R417	R447			
	No Stuff	R408	R430	R438			
800MHz	Stuff	R408	R417	R447			
	No Stuff	R401	R430	R438			

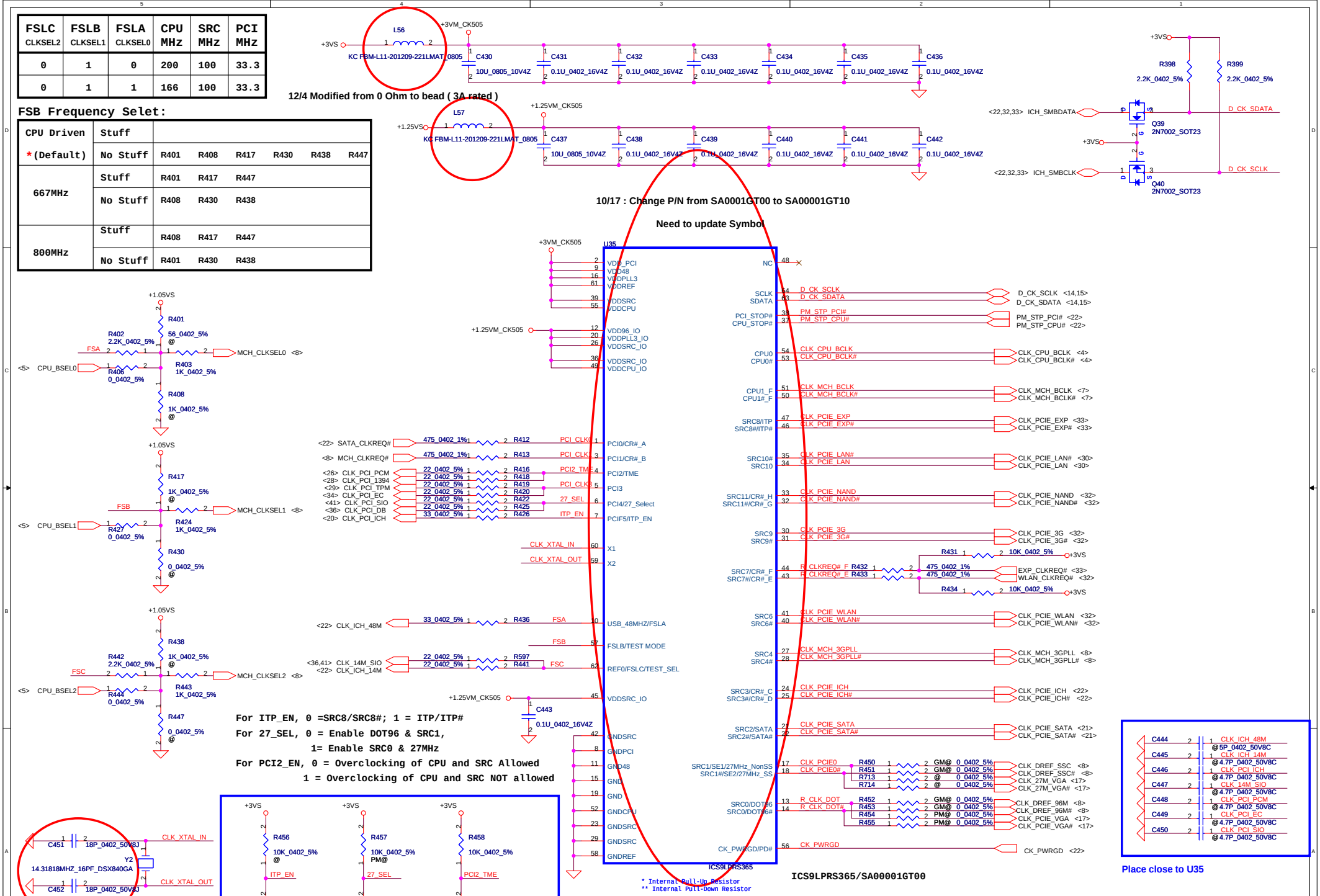

Security Classification	Compal Secret Data		
Issued Date	2006/08/04	Deciphered Date	2006/10/06

THIS SHEET OF ENGINEERING DRAWING IS THE PROPRIETARY PROPERTY OF COMPAL ELECTRONICS, INC. AND CONTAINS CONFIDENTIAL AND TRADE SECRET INFORMATION. THIS SHEET MAY NOT BE TRANSFERED FROM THE CUSTODY OF THE COMPETENT DIVISION OF R&D DEPARTMENT EXCEPT AS AUTHORIZED BY COMPAL ELECTRONICS, INC. NEITHER THIS SHEET NOR THE INFORMATION IT CONTAINS MAY BE USED BY OR DISCLOSED TO ANY THIRD PARTY WITHOUT PRIOR WRITTEN CONSENT OF COMPAL ELECTRONICS, INC.

Compal Electronics, Inc.

Title: **Clock generator**

Size	Document Number	Rev
	IXXXX LA-3XXXP	0.1

Date: Friday, February 09, 2007 | Sheet 16 of 53

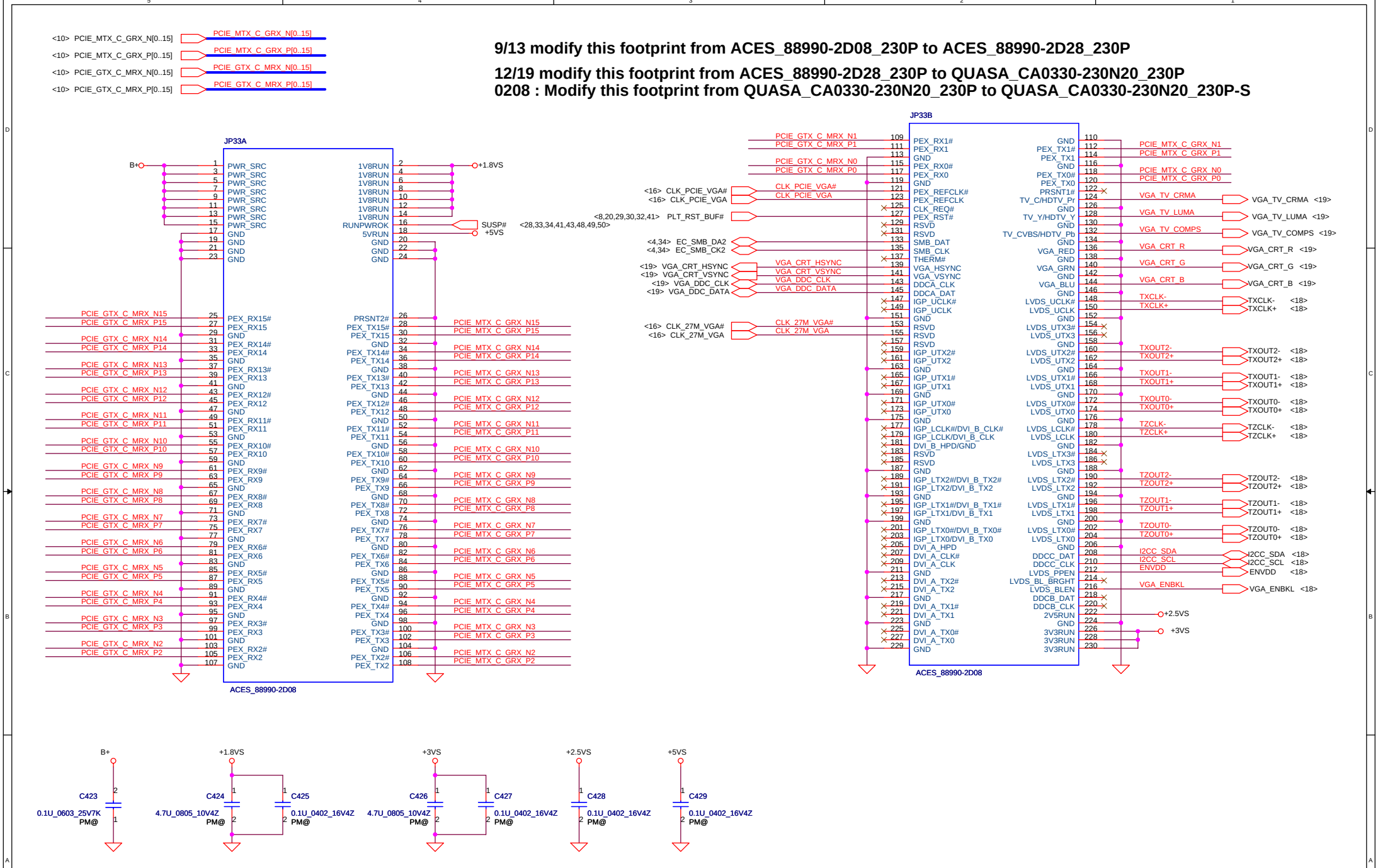

Security Classification	Compal Secret Data		
Issued Date	2006/08/18	Deciphered Date	2007/8/18

THIS SHEET OF ENGINEERING DRAWING IS THE PROPRIETARY PROPERTY OF COMPAL ELECTRONICS, INC. AND CONTAINS CONFIDENTIAL AND TRADE SECRET INFORMATION. THIS SHEET MAY NOT BE TRANSFERED FROM THE CUSTODY OF THE COMPETENT DIVISION OF R&D DEPARTMENT EXCEPT AS AUTHORIZED BY COMPAL ELECTRONICS, INC. NEITHER THIS SHEET NOR THE INFORMATION IT CONTAINS MAY BE USED BY OR DISCLOSED TO ANY THIRD PARTY WITHOUT PRIOR WRITTEN CONSENT OF COMPAL ELECTRONICS, INC.

Compal Electronics, Inc.

Title: MXM Connector

Size: Custom | Document Number: IFTXX M/B LA-3541P Schematic | Rev: 0

Date: Friday, February 09, 2007 | Sheet 17 of 53

LCD POWER CIRCUIT

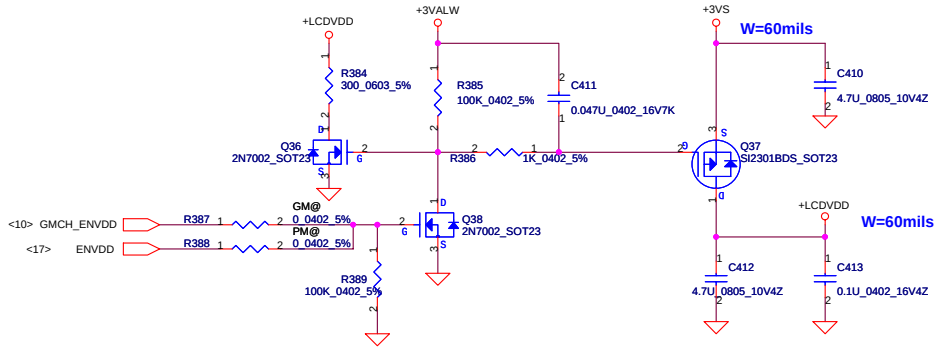

Routing Diagram

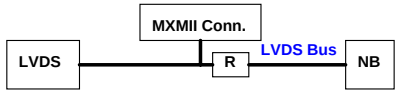

Use Daisy chain to route

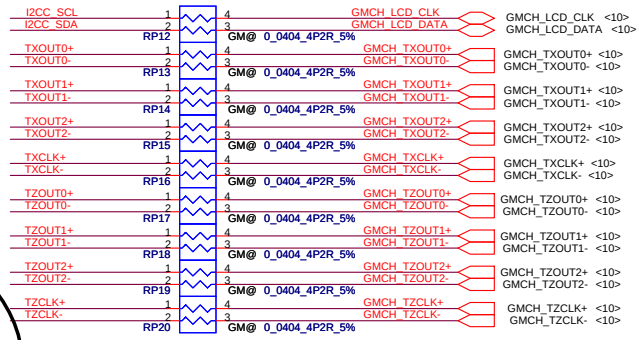

LCD/PANEL BD. Conn.

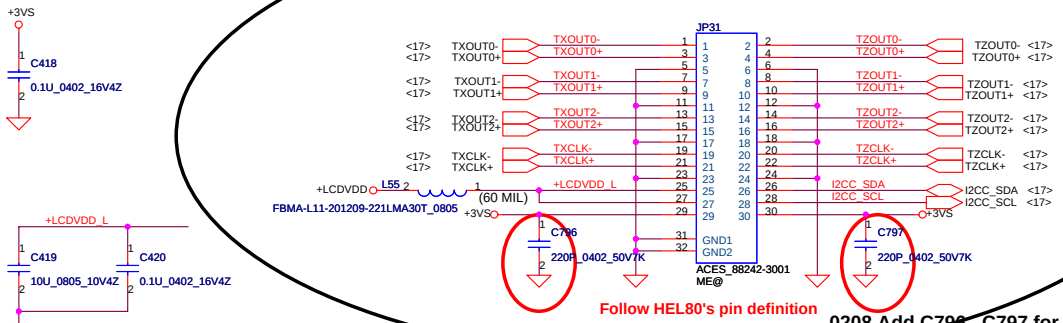

Follow HEL80's pin definition
Except pin 29

0208 Add C796 , C797 for EMI

INVERTER Conn.

12/18 modified from
220p @ to 470p mount
by EMI request

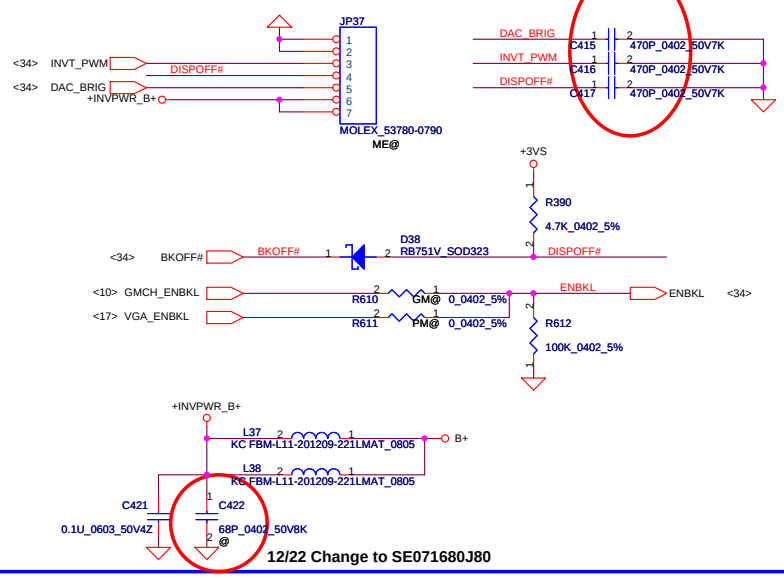

12/22 Change to SE071680J80

JEPICO Conn.

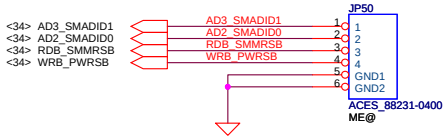

Security Classification	Compal Secret Data		
Issued Date	2006/08/18	Deciphered Date	2007/8/18

THIS SHEET OF ENGINEERING DRAWING IS THE PROPRIETARY PROPERTY OF COMPAL ELECTRONICS, INC. AND CONTAINS CONFIDENTIAL AND TRADE SECRET INFORMATION. THIS SHEET MAY NOT BE TRANSFERED FROM THE CUSTODY OF THE COMPETENT DIVISION OF R&D DEPARTMENT EXCEPT AS AUTHORIZED BY COMPAL ELECTRONICS, INC. NEITHER THIS SHEET NOR THE INFORMATION IT CONTAINS MAY BE USED BY OR DISCLOSED TO ANY THIRD PARTY WITHOUT PRIOR WRITTEN CONSENT OF COMPAL ELECTRONICS, INC.

Compal Electronics, Inc.

Title: LVDS & DVI Connector

Size: B | Document Number: IFTXX M/B LA-3541P Schematic | Rev: 0

Date: Friday, February 09, 2007 | Sheet 18 of 53

CRT Connector

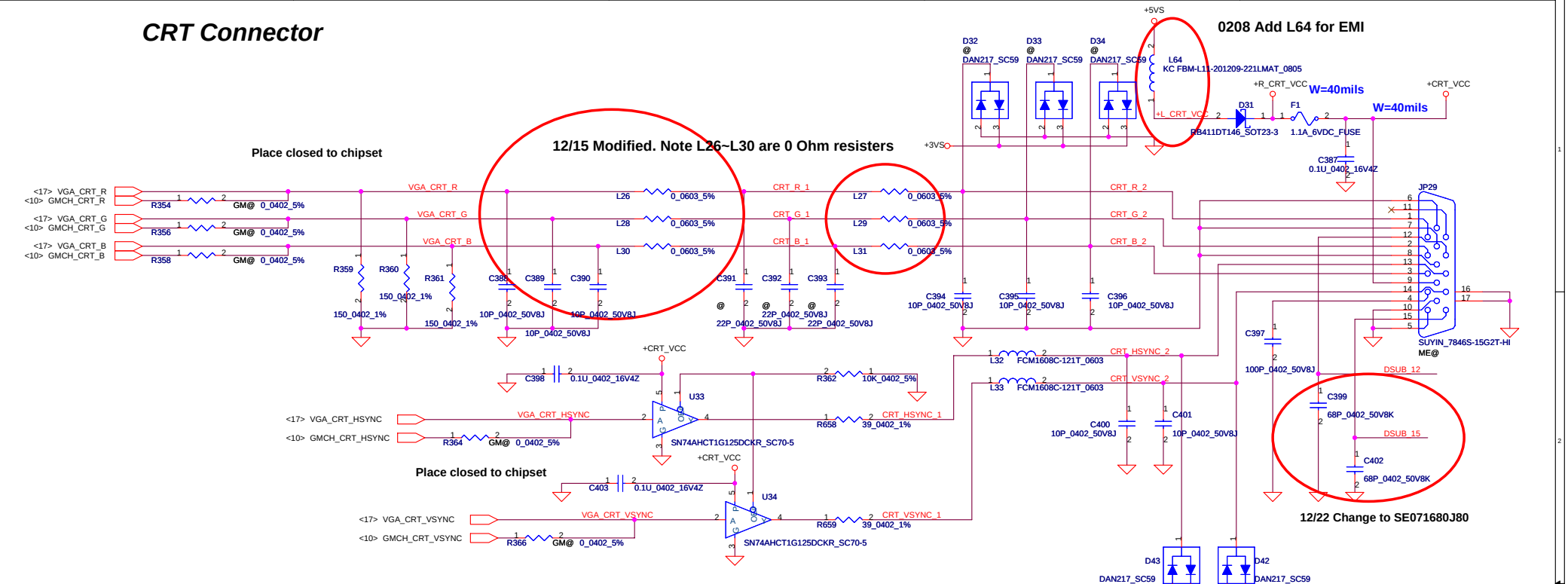

TV-OUT Conn.

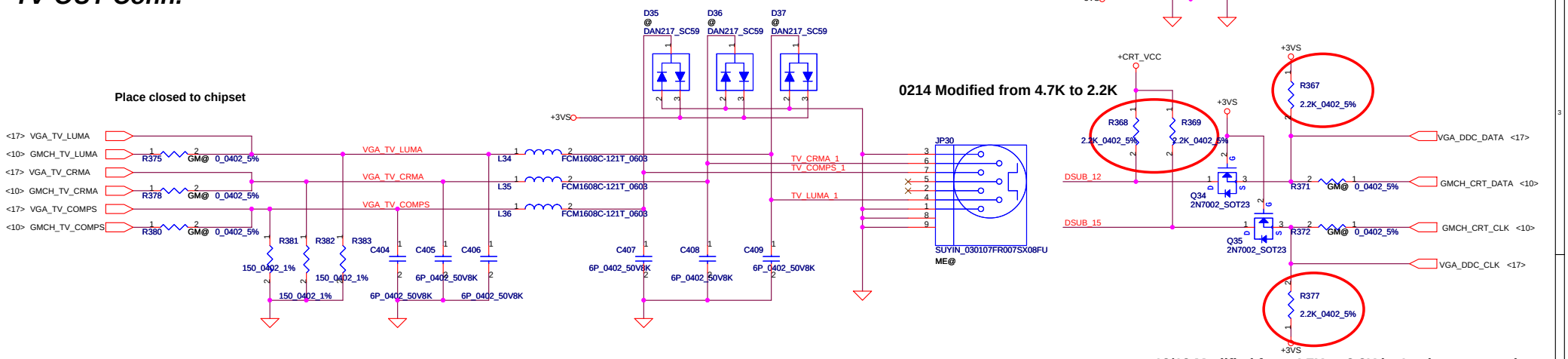

Security Classification	Compal Secret Data		
Issued Date	2006/08/18	Deciphered Date	2007/8/18

THIS SHEET OF ENGINEERING DRAWING IS THE PROPRIETARY PROPERTY OF COMPAL ELECTRONICS, INC. AND CONTAINS CONFIDENTIAL AND TRADE SECRET INFORMATION. THIS SHEET MAY NOT BE TRANSFERED FROM THE CUSTODY OF THE COMPETENT DIVISION OF R&D DEPARTMENT EXCEPT AS AUTHORIZED BY COMPAL ELECTRONICS, INC. NEITHER THIS SHEET NOR THE INFORMATION IT CONTAINS MAY BE USED BY OR DISCLOSED TO ANY THIRD PARTY WITHOUT PRIOR WRITTEN CONSENT OF COMPAL ELECTRONICS, INC.

Compal Electronics, Inc.

Title: CRT & TV-OUT Connector

Size: B | Document Number: IFTXX M/B LA-3541P Schematic | Rev: 0

Date: Thursday, February 15, 2007 | Sheet 19 of 53

10/17 : Change P/N from SA000010G00 to SA00001JU10
10/17 : FootPrint : SA000010G00
BOM : SA00001JU10
1/2 : Change U37 GM part number to SA00001JU80

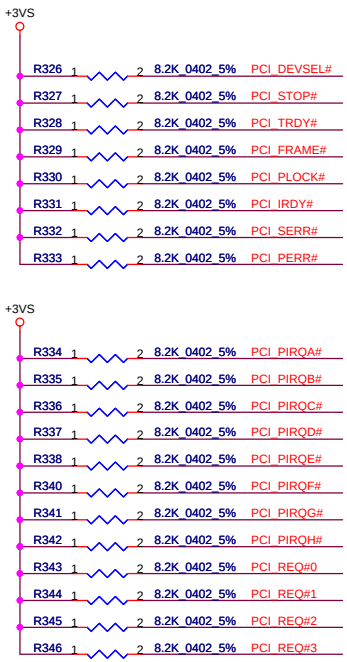

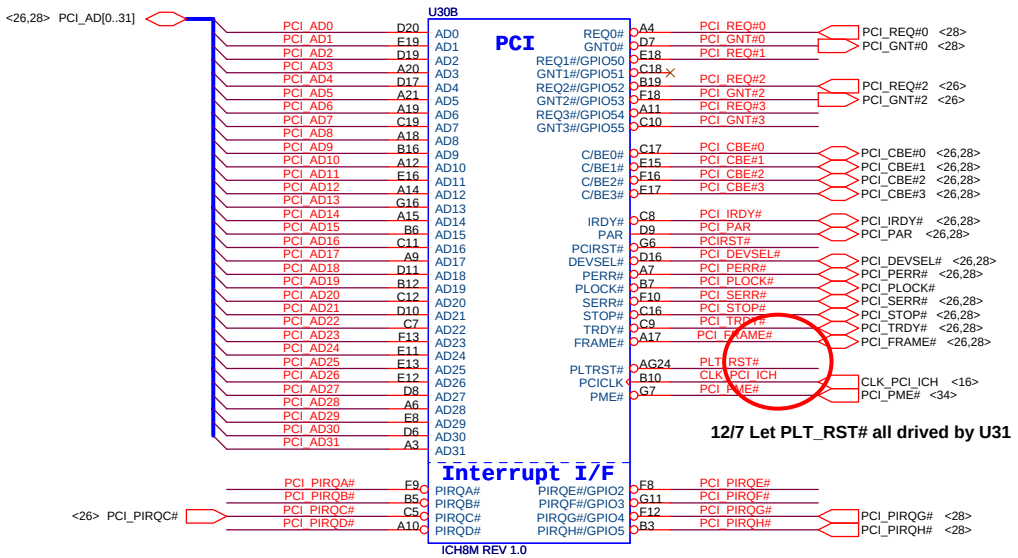

12/7 Let PLT_RST# all drived by U31

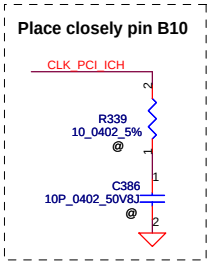

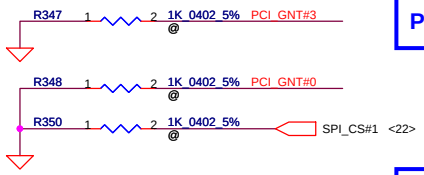

A16 Swap Override Strap	
PCI_GNT#3	Low= A16 swap override Enable High= Default*

Boot BIOS Strap		
PCI_GNT#0	SPI_CS#1	Boot BIOS Loaction
0	1	SPI
1	0	PCI
1	1	LPC*

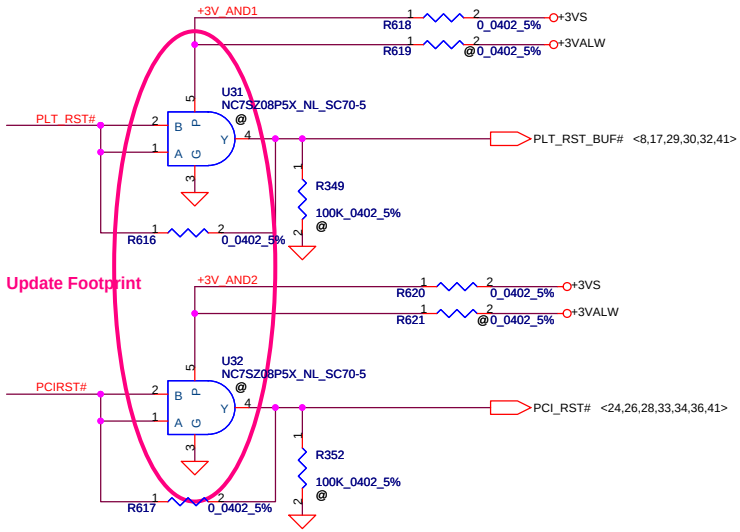

Security Classification	Compal Secret Data		
Issued Date	2006/08/18	Deciphered Date	2007/8/18

THIS SHEET OF ENGINEERING DRAWING IS THE PROPRIETARY PROPERTY OF COMPAL ELECTRONICS, INC. AND CONTAINS CONFIDENTIAL AND TRADE SECRET INFORMATION. THIS SHEET MAY NOT BE TRANSFERED FROM THE CUSTODY OF THE COMPETENT DIVISION OF R&D DEPARTMENT EXCEPT AS AUTHORIZED BY COMPAL ELECTRONICS, INC. NEITHER THIS SHEET NOR THE INFORMATION IT CONTAINS MAY BE USED BY OR DISCLOSED TO ANY THIRD PARTY WITHOUT PRIOR WRITTEN CONSENT OF COMPAL ELECTRONICS, INC.

Compal Electronics, Inc.

Title: ICH8M(1/4)-PCI

Size | Document Number: IFTXX M/B LA-3541P Schematic | Rev 0

Date: Friday, February 09, 2007 | Sheet 20 of 53

12/1 Modified C381 from 18P to 15P

12/7 Modified X4 to SJ100001U00 10ppm

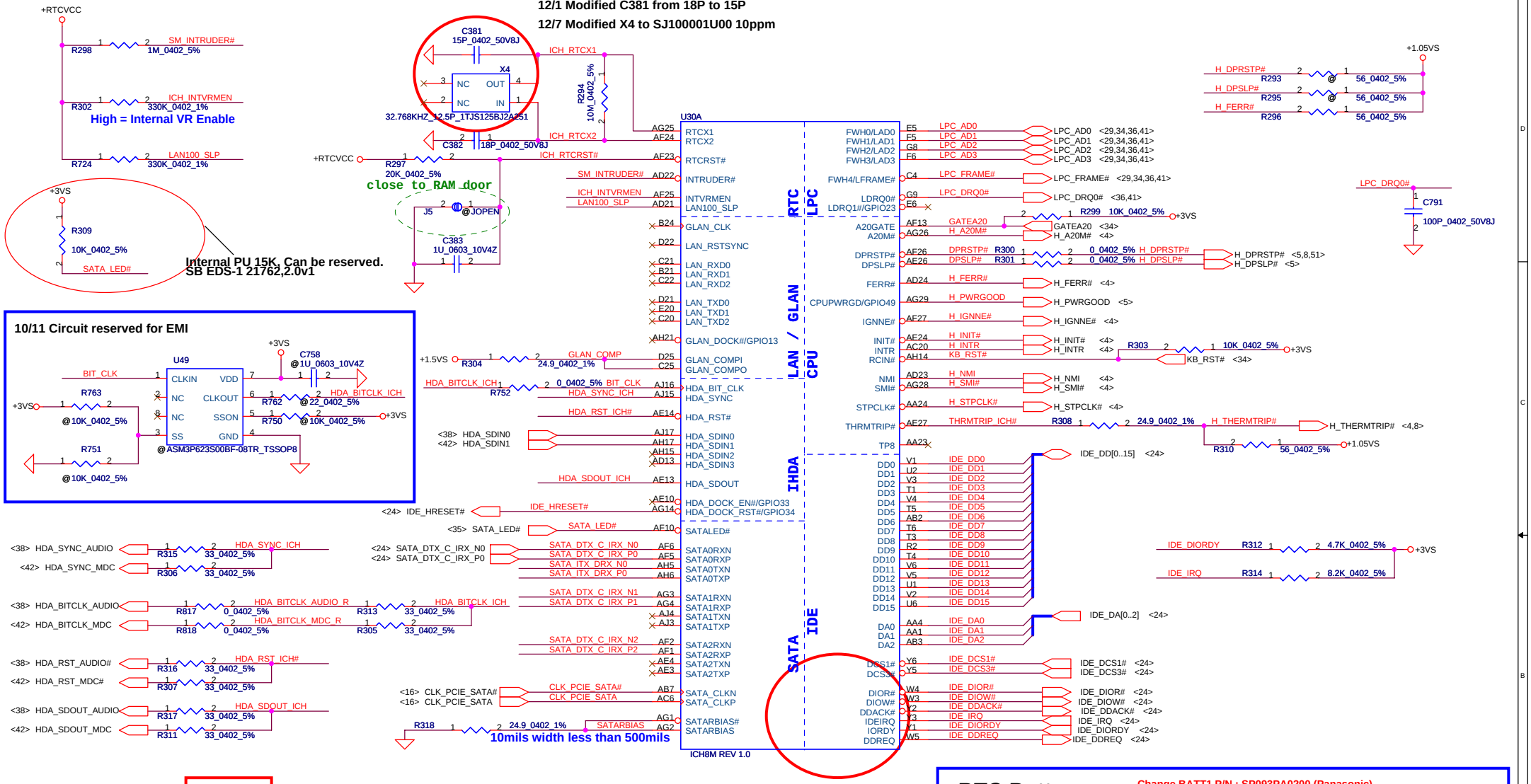

XOR Chain Entrance Strap		
ICH_TP3	HDA_SDOUT	Description
0	0	RSVD
0	1	Enter XOR Chain
1	0	Normal Operation
1	1	Set PCIE port config bit 1

Security Classification	Compal Secret Data		
Issued Date	2006/08/18	Deciphered Date	2007/8/18

THIS SHEET OF ENGINEERING DRAWING IS THE PROPRIETARY PROPERTY OF COMPAL ELECTRONICS, INC. AND CONTAINS CONFIDENTIAL AND TRADE SECRET INFORMATION. THIS SHEET MAY NOT BE TRANSFERED FROM THE CUSTODY OF THE COMPETENT DIVISION OF R&D DEPARTMENT EXCEPT AS AUTHORIZED BY COMPAL ELECTRONICS, INC. NEITHER THIS SHEET NOR THE INFORMATION IT CONTAINS MAY BE USED BY OR DISCLOSED TO ANY THIRD PARTY WITHOUT PRIOR WRITTEN CONSENT OF COMPAL ELECTRONICS, INC.

Compal Electronics, Inc.

Title: ICH8M(2/4)-LAN,IDELPC,RTC

Size: B | Document Number: IFTXX M/B LA-3541P Schematic | Rev: 0

Date: Wednesday, February 14, 2007 | Sheet 21 of 53

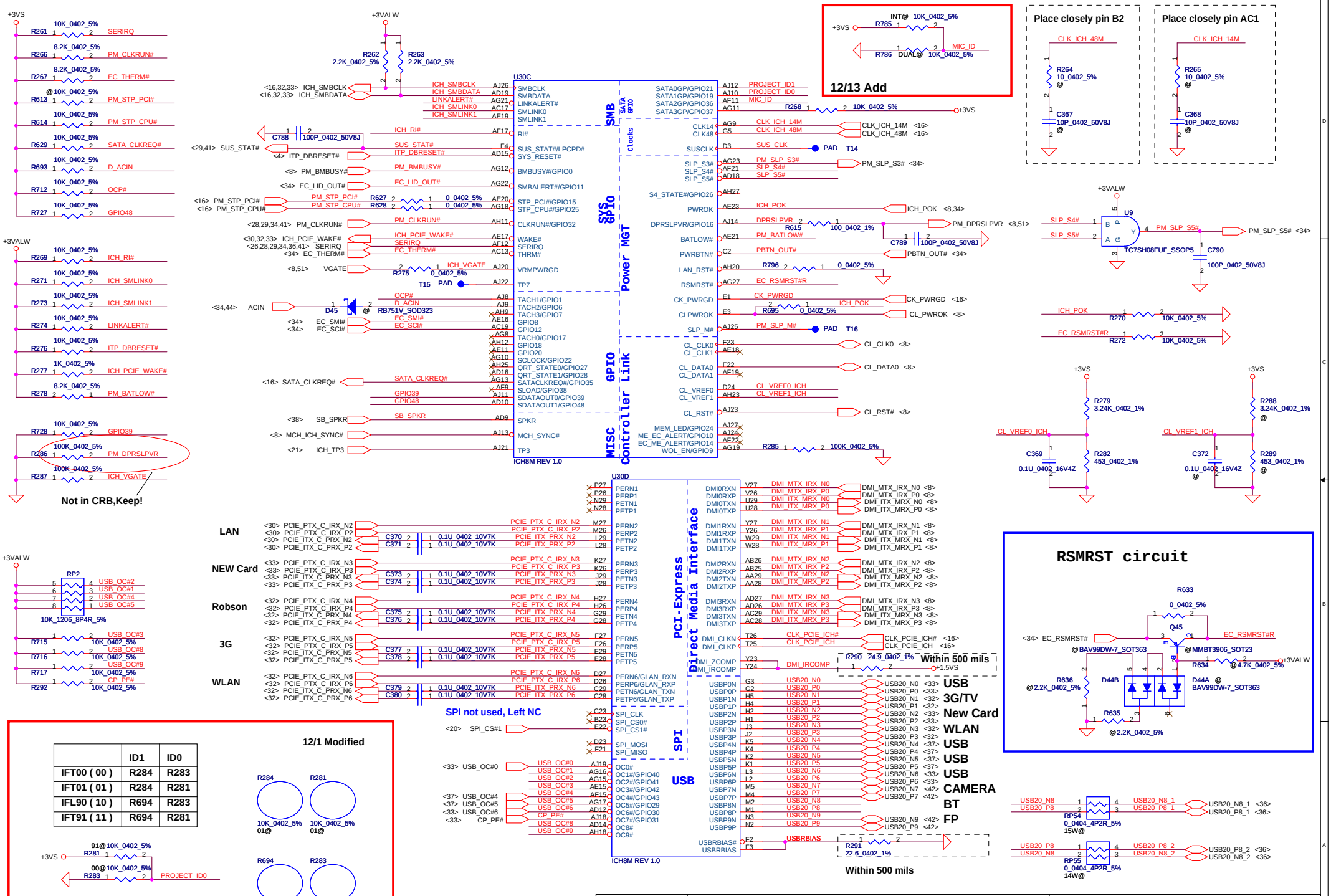

	ID1	ID0
IFT00 (00)	R284	R283
IFT01 (01)	R284	R281
IFL90 (10)	R694	R283
IFT91 (11)	R694	R281

THIS SHEET OF ENGINEERING DRAWING IS THE PROPRIETARY PROPERTY OF COMPAL ELECTRONICS, INC. AND CONTAINS CONFIDENTIAL AND TRADE SECRET INFORMATION. THIS SHEET MAY NOT BE TRANSFERED FROM THE CUSTODY OF THE COMPETENT DIVISION OF R&D DEPARTMENT EXCEPT AS AUTHORIZED BY COMPAL ELECTRONICS, INC. NEITHER THIS SHEET NOR THE INFORMATION IT CONTAINS MAY BE USED BY OR DISCLOSED TO ANY THIRD PARTY WITHOUT PRIOR WRITTEN CONSENT OF COMPAL ELECTRONICS, INC.

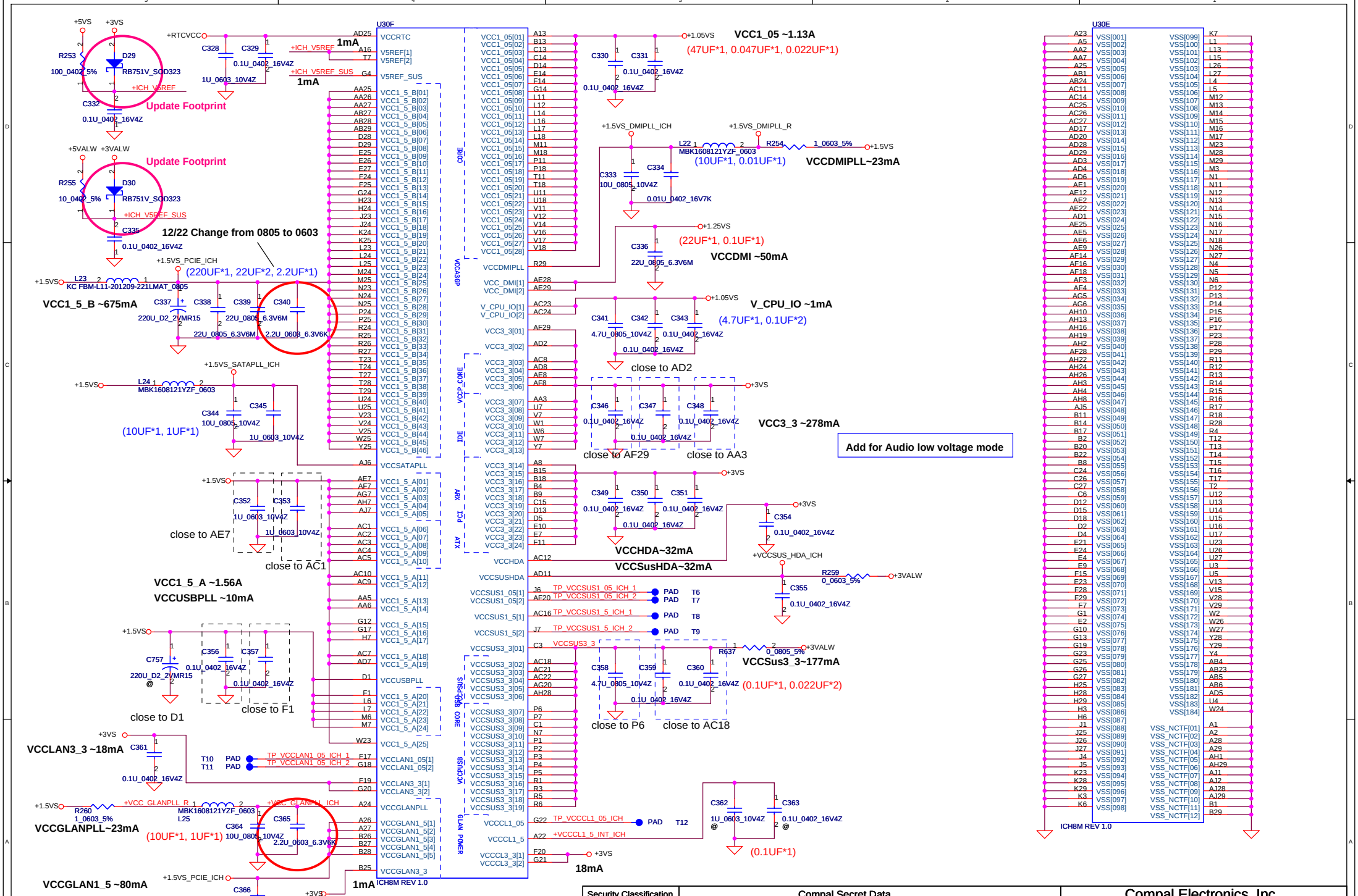

Security Classification	Compal Secret Data		
Issued Date	2006/08/18	Deciphered Date	2007/8/18

THIS SHEET OF ENGINEERING DRAWING IS THE PROPRIETARY PROPERTY OF COMPAL ELECTRONICS, INC. AND CONTAINS CONFIDENTIAL AND TRADE SECRET INFORMATION. THIS SHEET MAY NOT BE TRANSFERED FROM THE CUSTODY OF THE COMPETENT DIVISION OF R&D DEPARTMENT EXCEPT AS AUTHORIZED BY COMPAL ELECTRONICS, INC. NEITHER THIS SHEET NOR THE INFORMATION IT CONTAINS MAY BE USED BY OR DISCLOSED TO ANY THIRD PARTY WITHOUT PRIOR WRITTEN CONSENT OF COMPAL ELECTRONICS, INC.

Compal Electronics, Inc.

Title: IFTXX M/B LA-3541P Schematic

Size: Custom | Document Number: ICL50/ICK70 M/B LA-3551P Schematic | Rev: 0

Date: Thursday, February 08, 2007 | Sheet 23 of 53

14W ODD Conn.

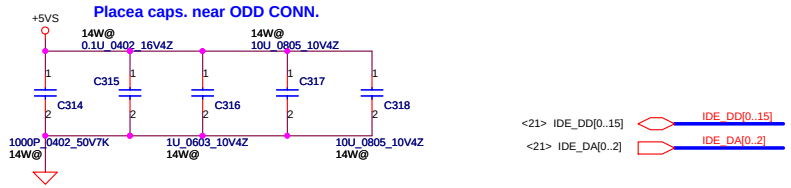

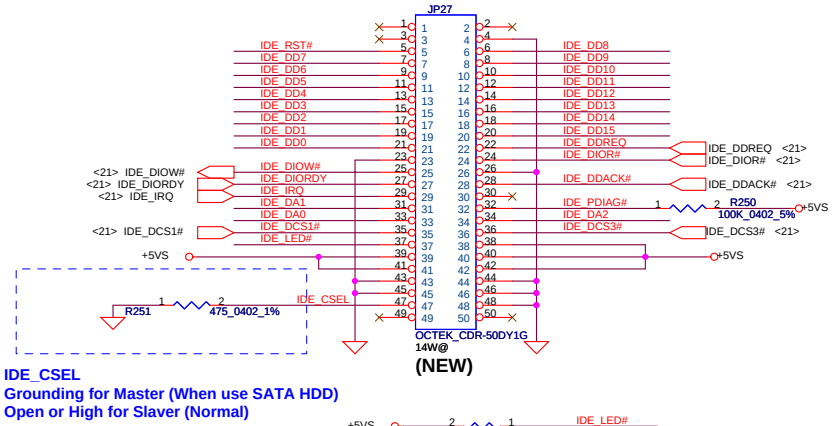

(NEW)

IDE_CSEL
Grounding for Master (When use SATA HDD)
Open or High for Slaver (Normal)

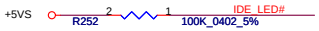

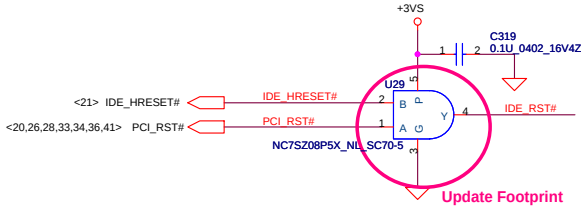

Update Footprint

SATA HDD Conn.

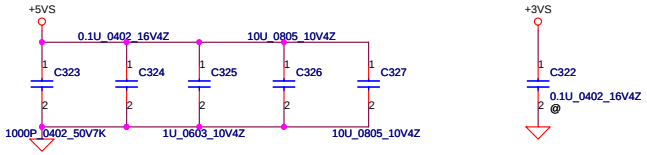

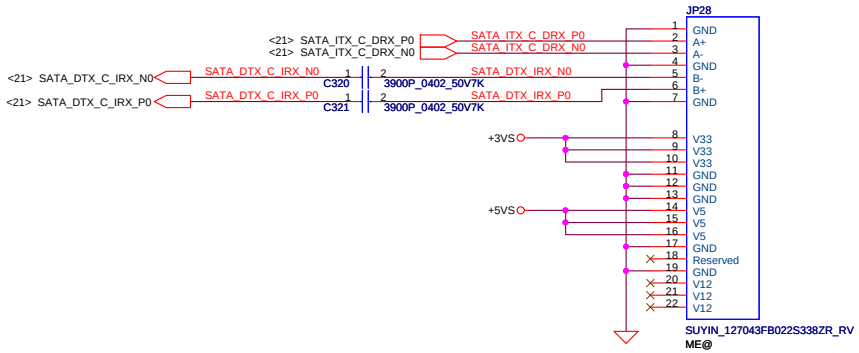

(NEW)
Change Library

15W ODD Conn.

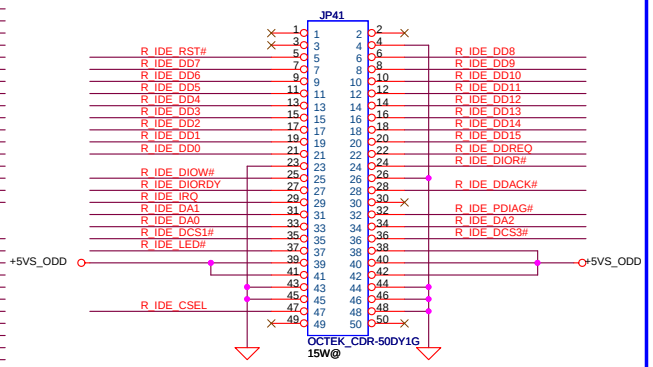

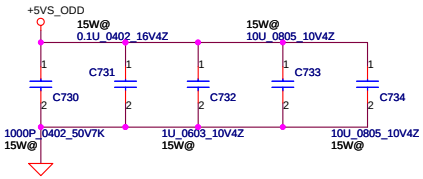

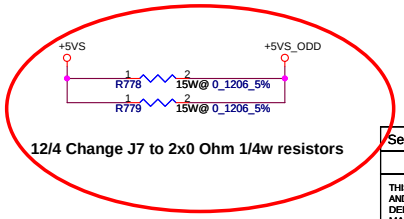

12/4 Change J7 to 2x0 Ohm 1/4w resistors

Security Classification	Compal Secret Data		
Issued Date	2006/08/18	Deciphered Date	2007/8/18

THIS SHEET OF ENGINEERING DRAWING IS THE PROPRIETARY PROPERTY OF COMPAL ELECTRONICS, INC. AND CONTAINS CONFIDENTIAL AND TRADE SECRET INFORMATION. THIS SHEET MAY NOT BE TRANSFERED FROM THE CUSTODY OF THE COMPETENT DIVISION OF R&D DEPARTMENT EXCEPT AS AUTHORIZED BY COMPAL ELECTRONICS, INC. NEITHER THIS SHEET NOR THE INFORMATION IT CONTAINS MAY BE USED BY OR DISCLOSED TO ANY THIRD PARTY WITHOUT PRIOR WRITTEN CONSENT OF COMPAL ELECTRONICS, INC.

Compal Electronics, Inc.

Title: HDD & ODD Connector

Size: B | Document Number: IFTXX M/B LA-3541P Schematic | Rev: 0

Date: Thursday, February 08, 2007 | Sheet 24 of 53

0206 => Note : Change BOM structure from HS@ to G-SENSOR@

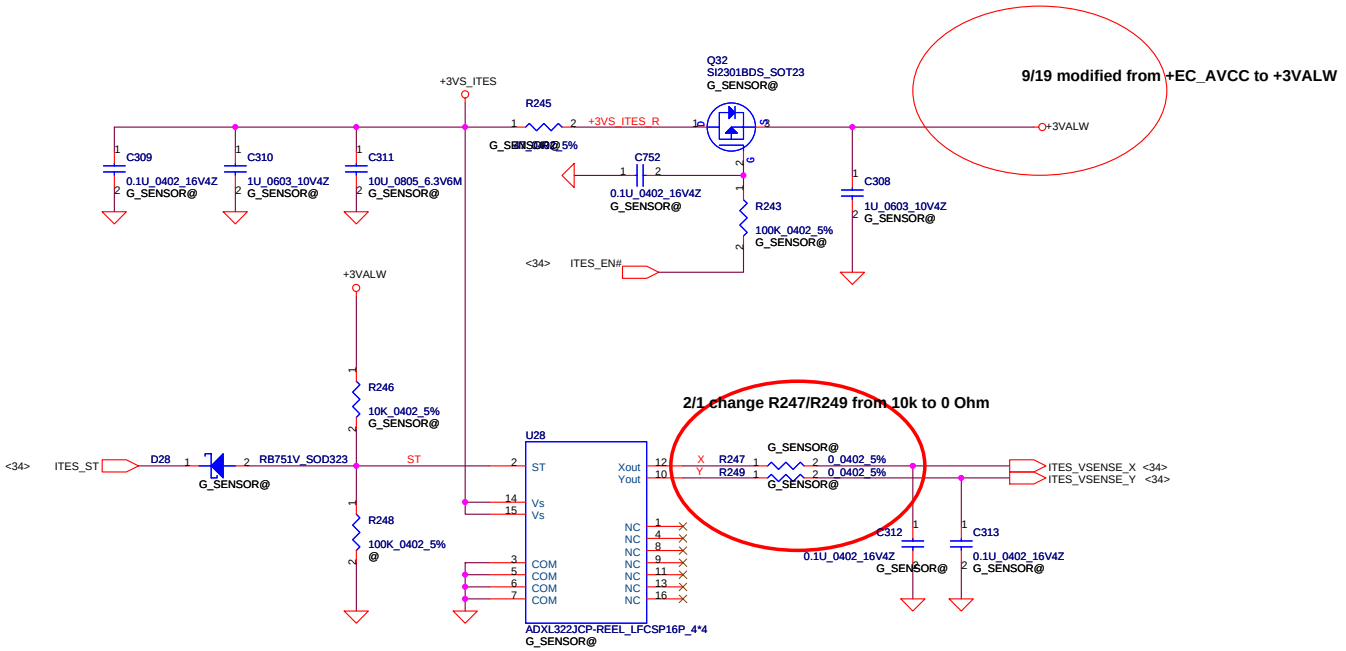

Security Classification	Compal Secret Data		
Issued Date	2006/08/05	Deciphered Date	2007/08/05

THIS SHEET OF ENGINEERING DRAWING IS THE PROPRIETARY PROPERTY OF COMPAL ELECTRONICS, INC. AND CONTAINS CONFIDENTIAL AND TRADE SECRET INFORMATION. THIS SHEET MAY NOT BE TRANSFERED FROM THE CUSTODY OF THE COMPETENT DIVISION OF R&D DEPARTMENT EXCEPT AS AUTHORIZED BY COMPAL ELECTRONICS, INC. NEITHER THIS SHEET NOR THE INFORMATION IT CONTAINS MAY BE USED BY OR DISCLOSED TO ANY THIRD PARTY WITHOUT PRIOR WRITTEN CONSENT OF COMPAL ELECTRONICS, INC.

Compal Electronics, Inc.

Title: CH7315A&HDMI Connector

Size: B | Document Number: LA-3541P | Rev: 0.1

Date: Tuesday, February 13, 2007 | Sheet 25 of 53

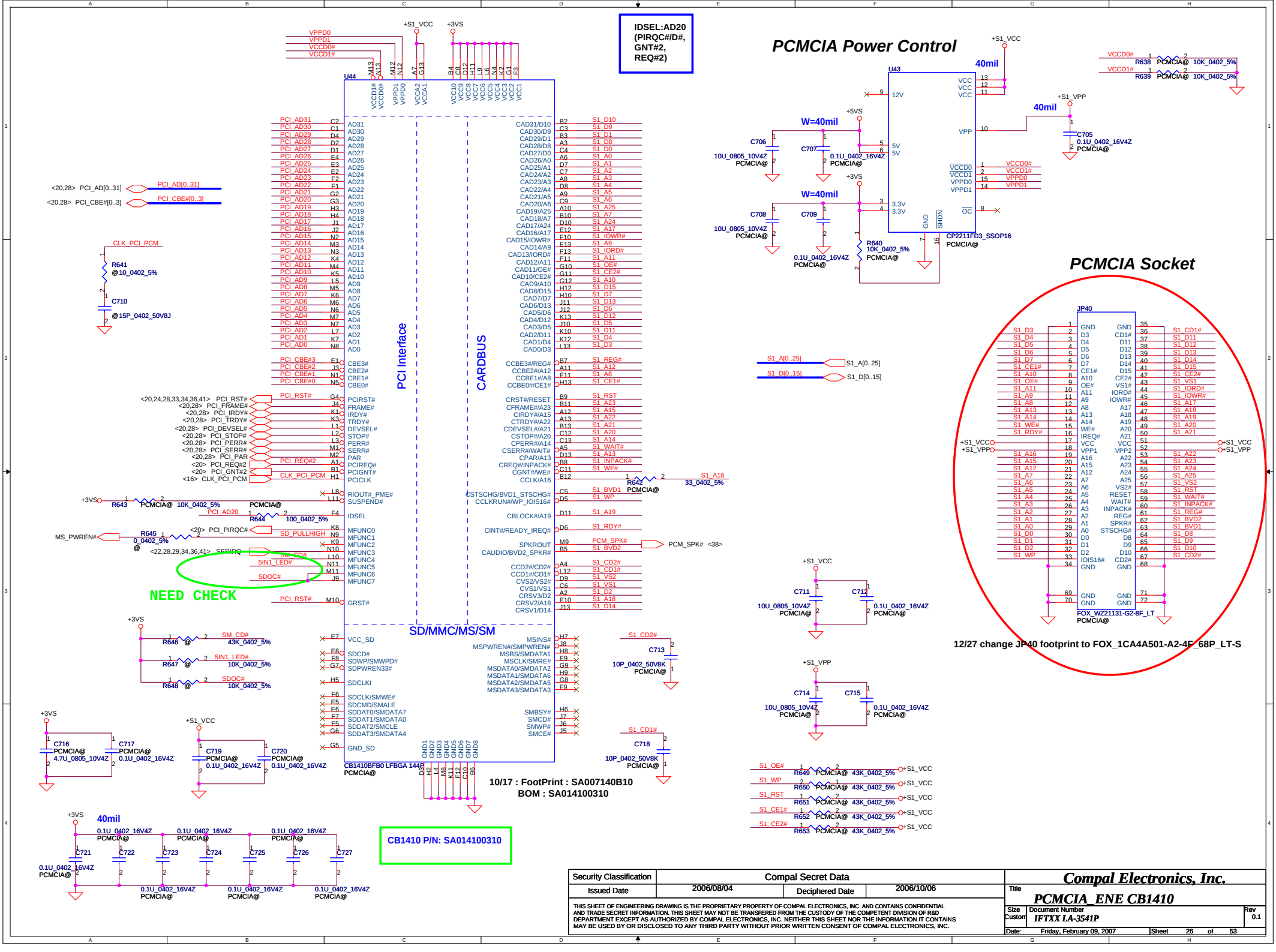

Security Classification	Compal Secret Data		
Issued Date	2006/08/04	Deciphered Date	2006/10/06

THIS SHEET OF ENGINEERING DRAWING IS THE PROPRIETARY PROPERTY OF COMPAL ELECTRONICS, INC. AND CONTAINS CONFIDENTIAL AND TRADE SECRET INFORMATION. THIS SHEET MAY NOT BE TRANSFERED FROM THE CUSTODY OF THE COMPETENT DIVISION OF R&D DEPARTMENT EXCEPT AS AUTHORIZED BY COMPAL ELECTRONICS, INC. NEITHER THIS SHEET NOR THE INFORMATION IT CONTAINS MAY BE USED BY OR DISCLOSED TO ANY THIRD PARTY WITHOUT PRIOR WRITTEN CONSENT OF COMPAL ELECTRONICS, INC.

Compal Electronics, Inc.

Title: **PCMCIA_ENE CB1410**

Size: Custom | Document Number: IFTXX LA-3541P | Rev: 0.1

Date: Friday, February 09, 2007 | Sheet 26 of 53

Title	<Title>
Size A	Document Number <Doc>
Rev	<RevCode>
Date: Thursday, February 08, 2007	Sheet 27 of 53

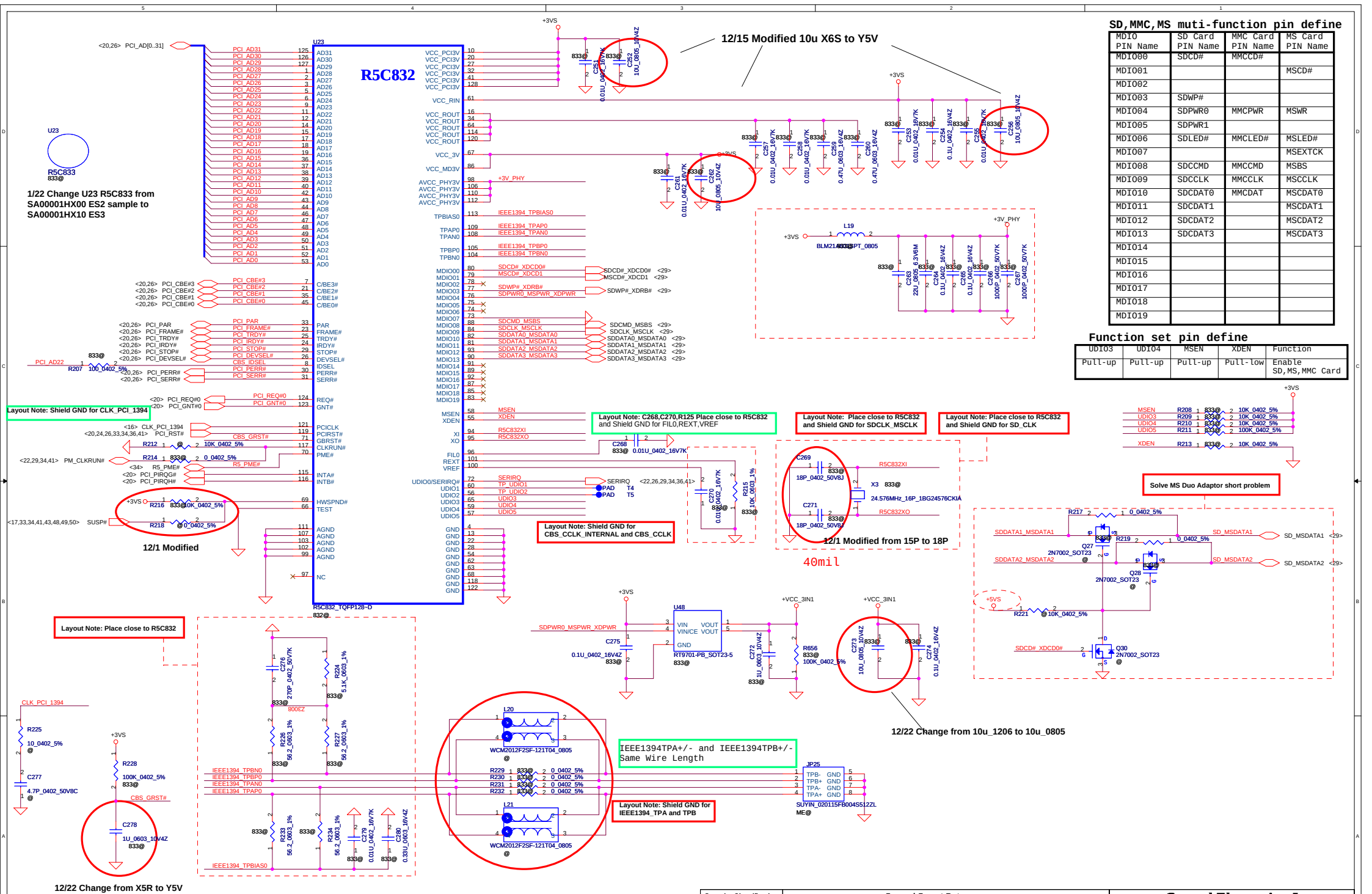

SD,MMC,MS muti-function pin define

MDIO PIN Name	SD Card PIN Name	MMC Card PIN Name	MS Card PIN Name
MDIO00	SDCD#	MMCCD#	
MDIO01			MSCD#
MDIO02			
MDIO03	SDWP#		
MDIO04	SDPWR0	MMCPWR	MSWR
MDIO05	SDPWR1		
MDIO06	SDLED#	MMCLED#	MSLED#
MDIO07			MSEXTCK
MDIO08	SDCCMD	MMCCMD	MSBS
MDIO09	SDCCLK	MMCCLK	MSCCLK
MDIO10	SDCDAT0	MMCDAT	MSCDAT0
MDIO11	SDCDAT1		MSCDAT1
MDIO12	SDCDAT2		MSCDAT2
MDIO13	SDCDAT3		MSCDAT3
MDIO14			
MDIO15			
MDIO16			
MDIO17			
MDIO18			
MDIO19			

Function set pin define

UDIO3	UDIO4	MSEN	XDEN	Function
Pull-up	Pull-up	Pull-up	Pull-low	Enable SD,MS,MMC Card

Security Classification	Compal Secret Data		
Issued Date	2006/08/04	Deciphered Date	2006/10/06

THIS SHEET OF ENGINEERING DRAWING IS THE PROPRIETARY PROPERTY OF COMPAL ELECTRONICS, INC. AND CONTAINS CONFIDENTIAL AND TRADE SECRET INFORMATION. THIS SHEET MAY NOT BE TRANSFERED FROM THE CUSTODY OF THE COMPETENT DIVISION OF R&D DEPARTMENT EXCEPT AS AUTHORIZED BY COMPAL ELECTRONICS, INC. NEITHER THIS SHEET NOR THE INFORMATION IT CONTAINS MAY BE USED BY OR DISCLOSED TO ANY THIRD PARTY WITHOUT PRIOR WRITTEN CONSENT OF COMPAL ELECTRONICS, INC.

Compal Electronics, Inc.

Title: **1394+3 in 1 Card**

Size: Custom | Document Number: XXXXX LA-3541P | Rev: 0.1

Date: Monday, February 12, 2007 | Sheet 28 of 53

3 in 1 Card Reader

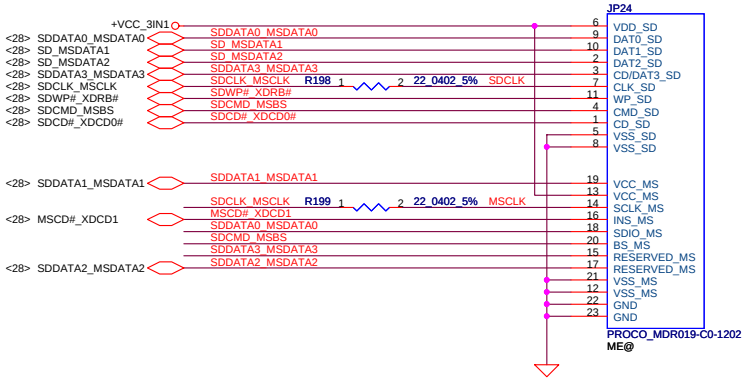

For A30

12/15 Add. Place close to U22 and JP47

TPM 1.2

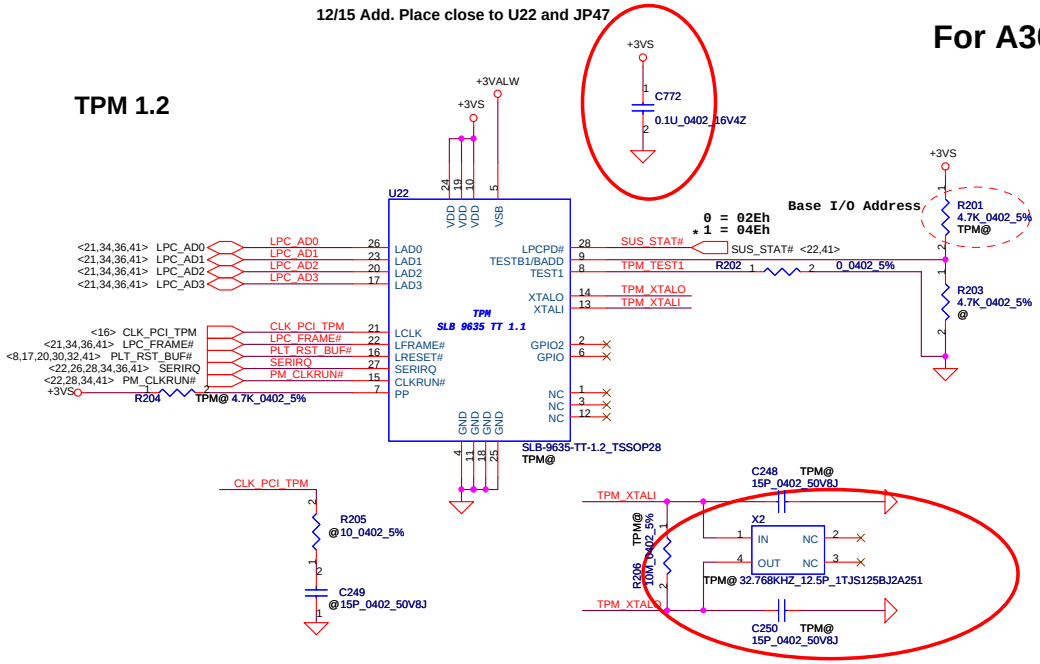

12/1 Modified C248 and C250 from 18P to 15P

TPM Conn. For C38

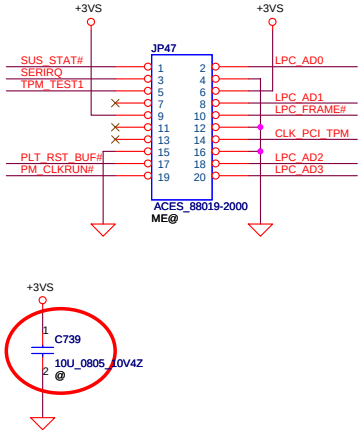

Place this cap close to pin 6 and pin 9

12/15 Modified C739 to @

Security Classification	Compal Secret Data		
Issued Date	2006/08/04	Deciphered Date	2006/10/06

THIS SHEET OF ENGINEERING DRAWING IS THE PROPRIETARY PROPERTY OF COMPAL ELECTRONICS, INC. AND CONTAINS CONFIDENTIAL AND TRADE SECRET INFORMATION. THIS SHEET MAY NOT BE TRANSFERED FROM THE CUSTODY OF THE COMPETENT DIVISION OF R&D DEPARTMENT EXCEPT AS AUTHORIZED BY COMPAL ELECTRONICS, INC. NEITHER THIS SHEET NOR THE INFORMATION IT CONTAINS MAY BE USED BY OR DISCLOSED TO ANY THIRD PARTY WITHOUT PRIOR WRITTEN CONSENT OF COMPAL ELECTRONICS, INC.

Compal Electronics, Inc.

Title: **INDICATE LED**

Size: Custom | Document Number: XXXXX LA-3541P | Rev: 0.1

Date: Friday, February 09, 2007 | Sheet 29 of 53

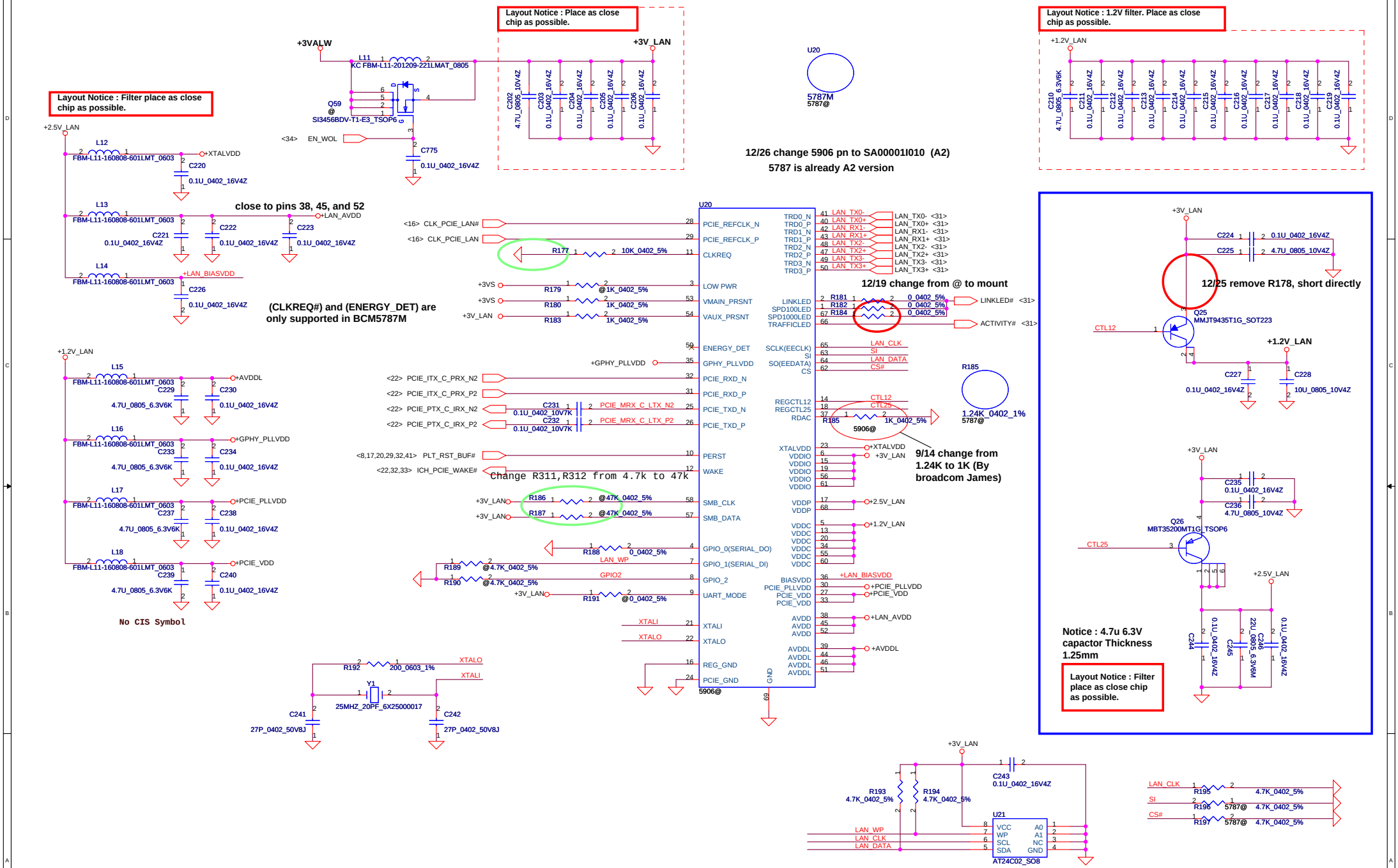

Security Classification	Compal Secret Data		
Issued Date	2006/08/04	Deciphered Date	2006/10/06

THIS SHEET OF ENGINEERING DRAWING IS THE PROPRIETARY PROPERTY OF COMPAL ELECTRONICS, INC. AND CONTAINS CONFIDENTIAL AND TRADE SECRET INFORMATION. THIS SHEET MAY NOT BE TRANSFERED FROM THE CUSTODY OF THE COMPETENT DIVISION OF R&D DEPARTMENT EXCEPT AS AUTHORIZED BY COMPAL ELECTRONICS, INC. NEITHER THIS SHEET NOR THE INFORMATION IT CONTAINS MAY BE USED BY OR DISCLOSED TO ANY THIRD PARTY WITHOUT PRIOR WRITTEN CONSENT OF COMPAL ELECTRONICS, INC.

Title: BCM5787MKML

Size: Custom | Document Number: XXXXX LA-3541P | Rev: 0.1

Date: Thursday, February 15, 2007 | Sheet 30 of 53

12/27 Change L10 to SM010032020
12/27 Add R815

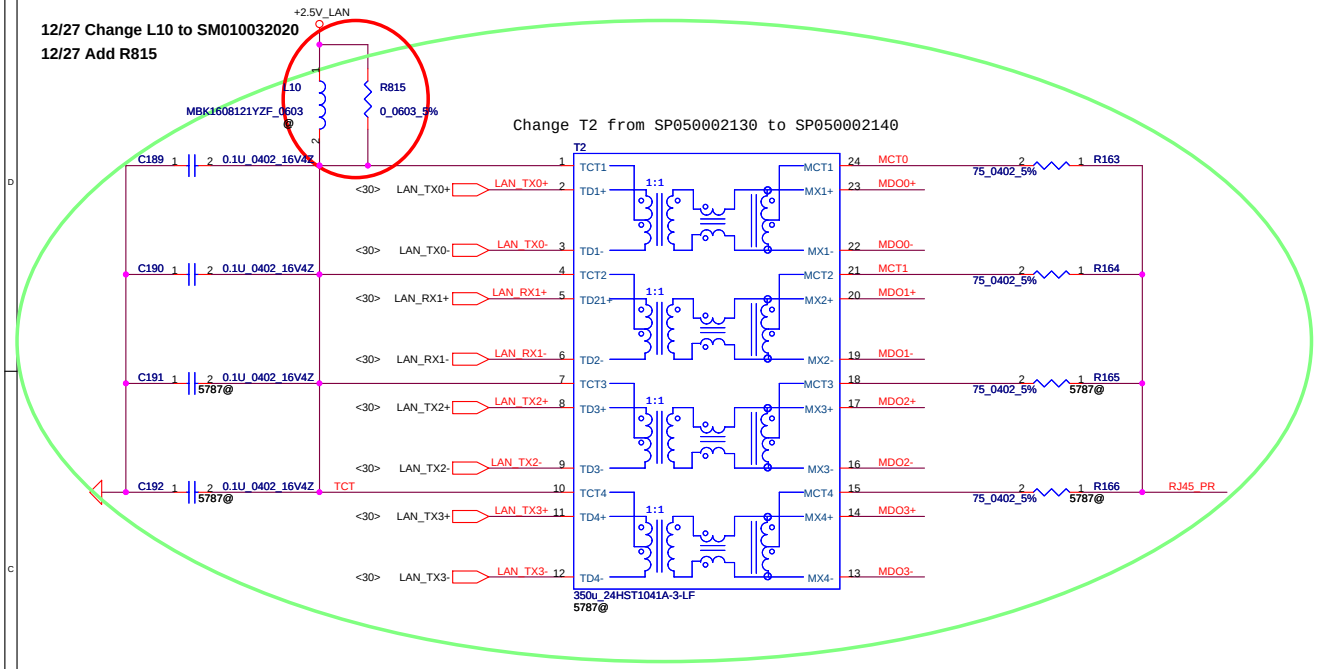

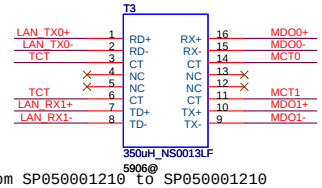

Change T1 from SP050001210 to SP050001210

Change C468,C470,C473,C474,C475,C476 from 0.01uF to 0.1uF

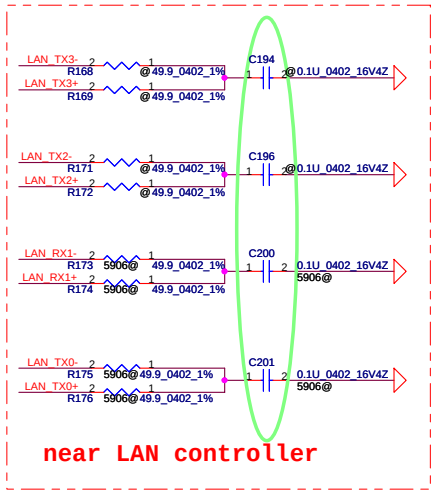

Lan Conn.

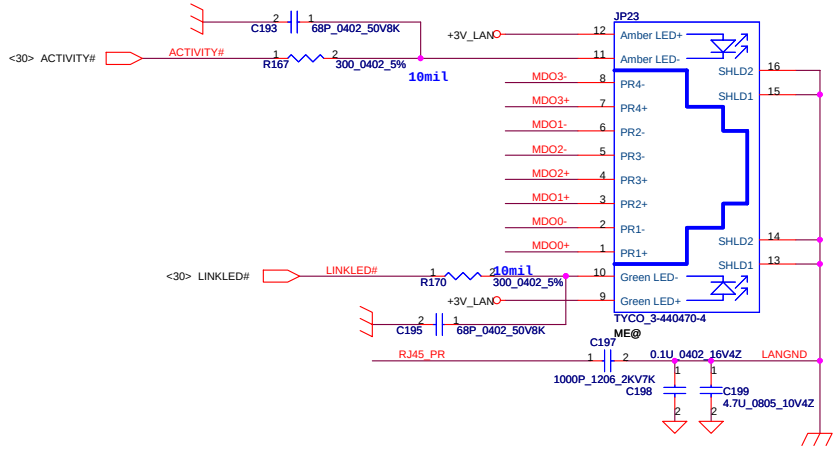

Security Classification	Compal Secret Data		
Issued Date	2006/08/04	Deciphered Date	2006/10/06

THIS SHEET OF ENGINEERING DRAWING IS THE PROPRIETARY PROPERTY OF COMPAL ELECTRONICS, INC. AND CONTAINS CONFIDENTIAL AND TRADE SECRET INFORMATION. THIS SHEET MAY NOT BE TRANSFERED FROM THE CUSTODY OF THE COMPETENT DIVISION OF R&D DEPARTMENT EXCEPT AS AUTHORIZED BY COMPAL ELECTRONICS, INC. NEITHER THIS SHEET NOR THE INFORMATION IT CONTAINS MAY BE USED BY OR DISCLOSED TO ANY THIRD PARTY WITHOUT PRIOR WRITTEN CONSENT OF COMPAL ELECTRONICS, INC.

Compal Electronics, Inc.

Title: LAN CONTROLLER

Size: Custom | Document Number: XXXXX LA-3541P | Rev: 0.1

Date: Thursday, February 08, 2007 | Sheet 31 of 53

NAND mini Card(Robson support)

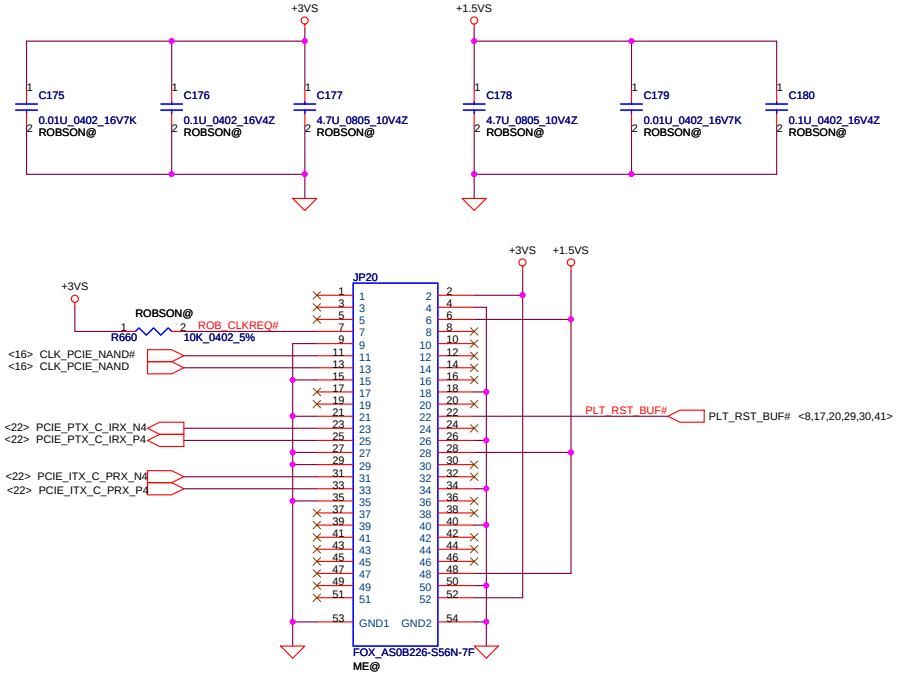

Mini-Express Card for 3G Or TV Tuner

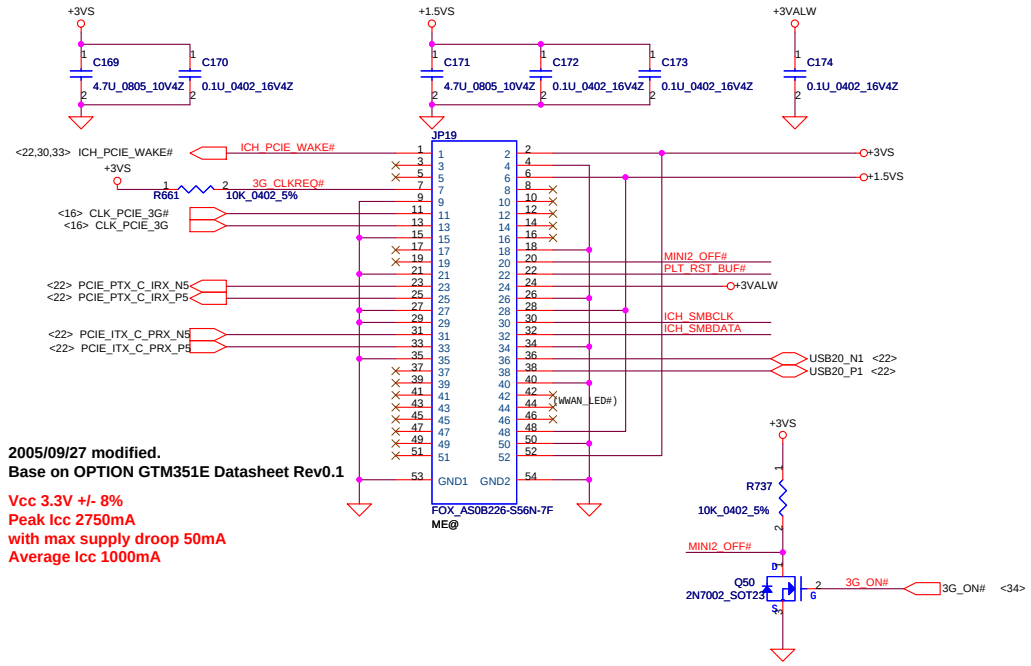

2005/09/27 modified.
Base on OPTION GTM351E Datasheet Rev0.1

Vcc 3.3V +/- 8%
Peak Icc 2750mA
with max supply droop 50mA
Average Icc 1000mA

Mini-Express Card for WLAN

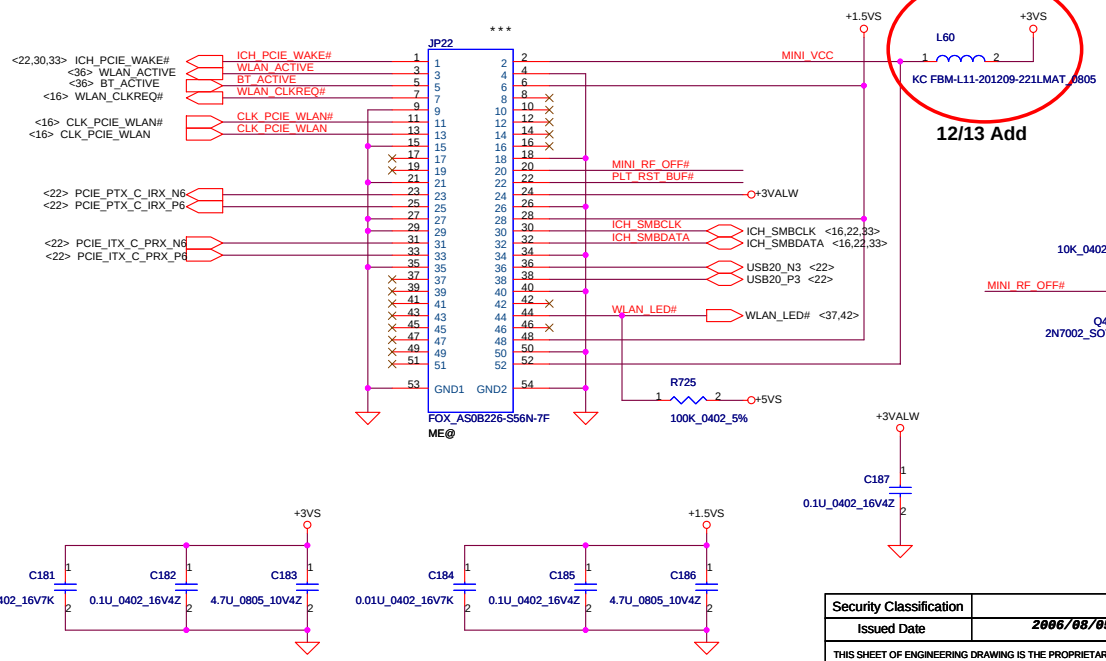

Kill SWITCH

12/28 modified to @

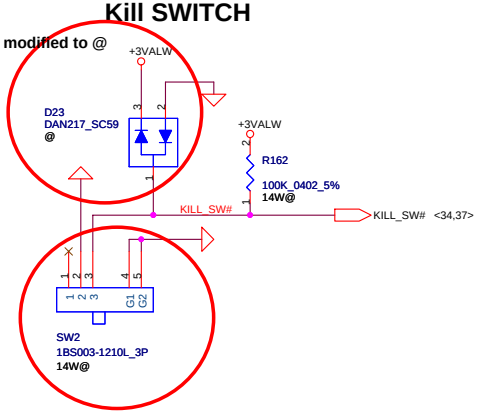

12/19 Change SW2 to correct symbol (by EMI)

Security Classification	Compal Secret Data		
Issued Date	2006/08/05	Deciphered Date	2007/08/05

THIS SHEET OF ENGINEERING DRAWING IS THE PROPRIETARY PROPERTY OF COMPAL ELECTRONICS, INC. AND CONTAINS CONFIDENTIAL AND TRADE SECRET INFORMATION. THIS SHEET MAY NOT BE TRANSFERED FROM THE CUSTODY OF THE COMPETENT DIVISION OF R&D DEPARTMENT EXCEPT AS AUTHORIZED BY COMPAL ELECTRONICS, INC. NEITHER THIS SHEET NOR THE INFORMATION IT CONTAINS MAY BE USED BY OR DISCLOSED TO ANY THIRD PARTY WITHOUT PRIOR WRITTEN CONSENT OF COMPAL ELECTRONICS, INC.

Compal Electronics, Inc.

Title: Mini-Card/3G/FeliCa/FP

Size | Document Number: LA-3541P | Rev: 0.1

Date: Friday, February 09, 2007 | Sheet 32 of 53

New Card Power Switch

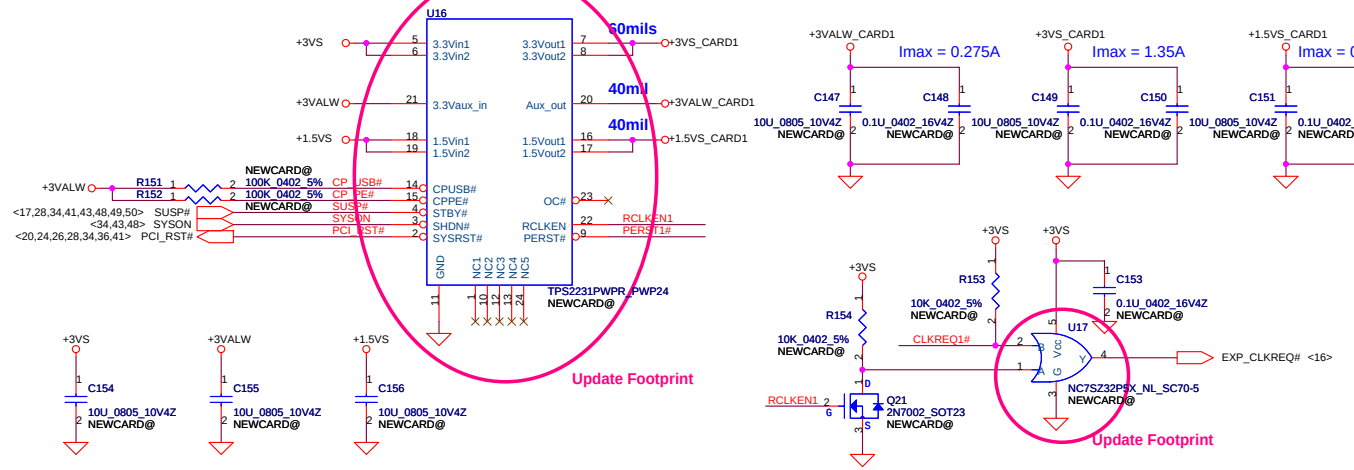

New Card Socket (Left/TOP)

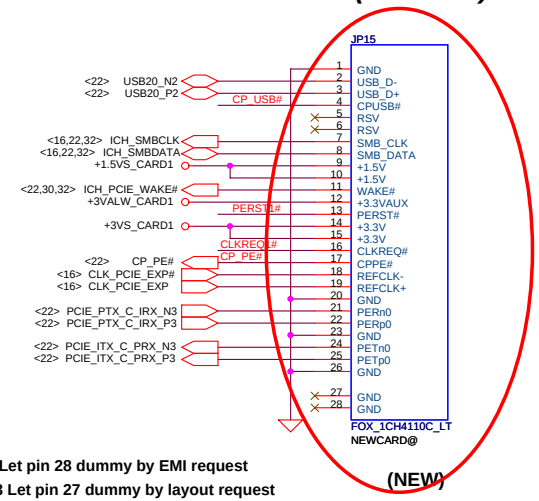

12/7 Let pin 28 dummy by EMI request
12/13 Let pin 27 dummy by layout request
12/27 change JP 15 footprint to FOX_1CX41201_26P_LT-S

USB CONN. 1

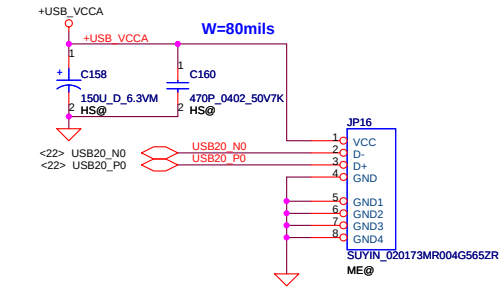

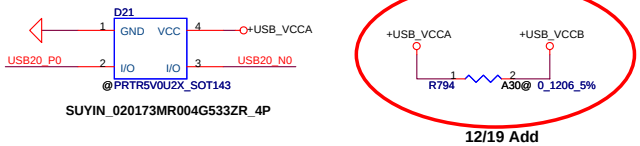

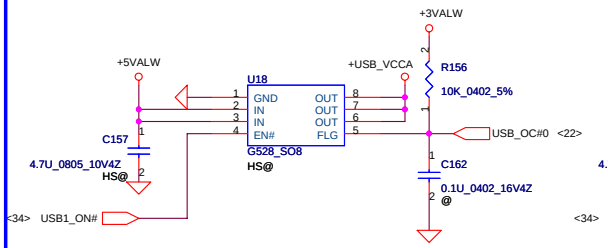

USB CONN. 2

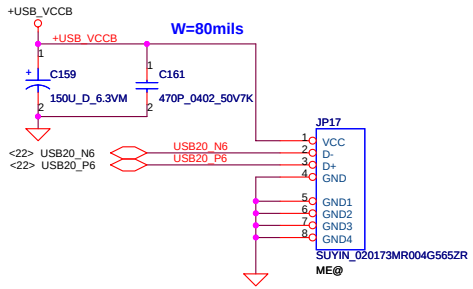

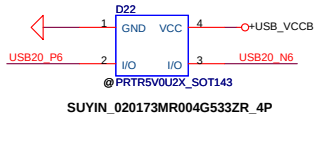

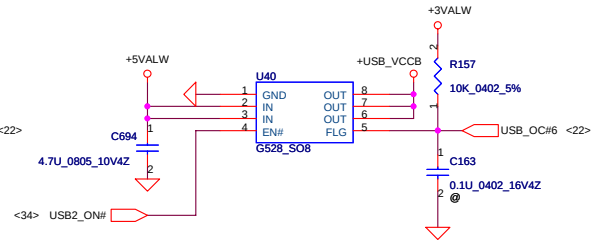

9/17 modified this block

Security Classification	Compal Secret Data		
Issued Date	2006/08/18	Deciphered Date	2007/8/18

THIS SHEET OF ENGINEERING DRAWING IS THE PROPRIETARY PROPERTY OF COMPAL ELECTRONICS, INC. AND CONTAINS CONFIDENTIAL AND TRADE SECRET INFORMATION. THIS SHEET MAY NOT BE TRANSFERED FROM THE CUSTODY OF THE COMPETENT DIVISION OF R&D DEPARTMENT EXCEPT AS AUTHORIZED BY COMPAL ELECTRONICS, INC. NEITHER THIS SHEET NOR THE INFORMATION IT CONTAINS MAY BE USED BY OR DISCLOSED TO ANY THIRD PARTY WITHOUT PRIOR WRITTEN CONSENT OF COMPAL ELECTRONICS, INC.

Compal Electronics, Inc.

Title: NEW CARD & USB Connector

Size: B | Document Number: IFTXX M/B LA-3541P Schematic | Rev: 0

Date: Friday, February 09, 2007 | Sheet 33 of 53

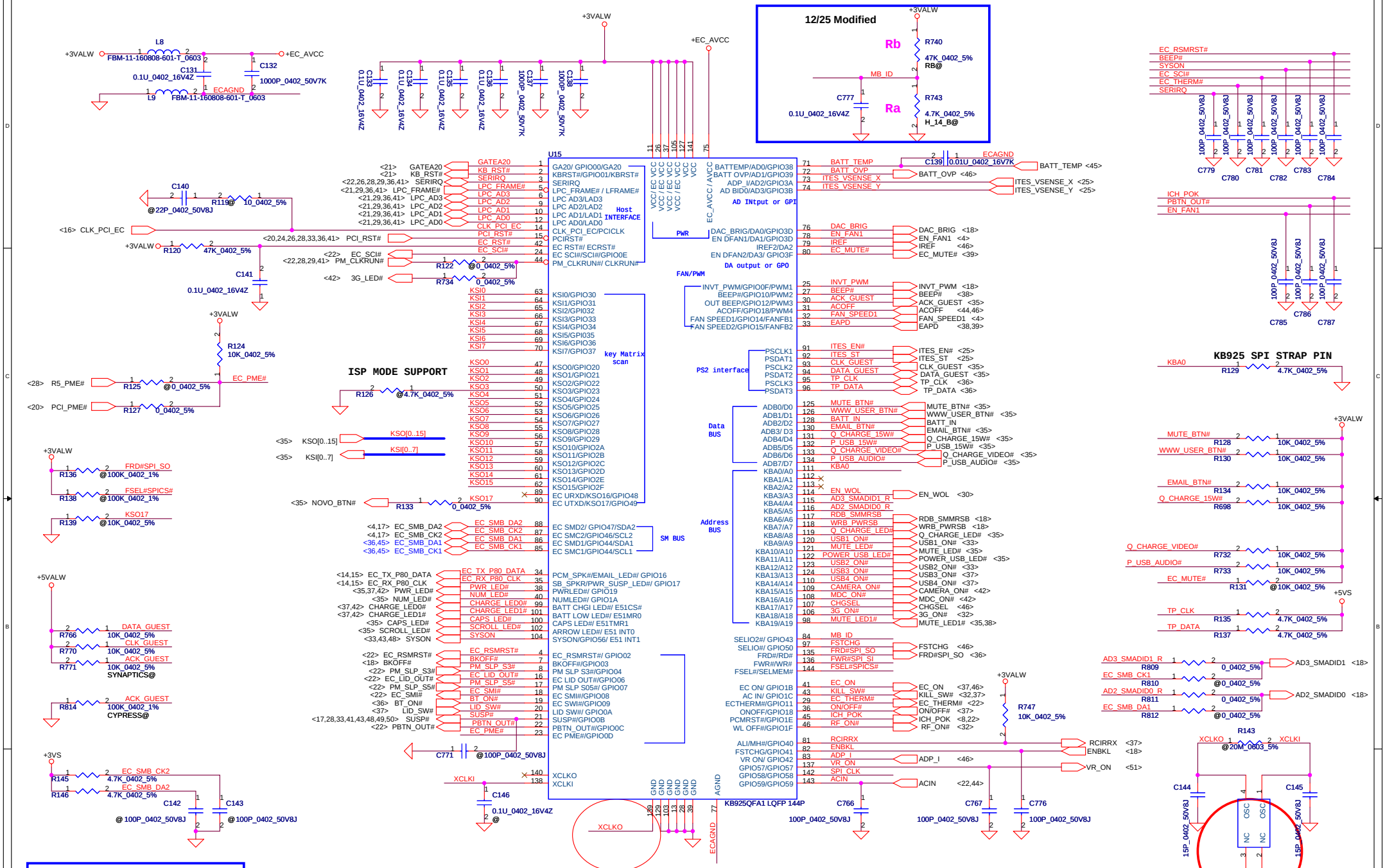

0206 => Change EC part number to SA00001HZ20

12/18 Change EC part number to SA00001HZ10

From ver. A1 to B0

2/1 Update X1 to correct symbol

KB925 should use Data code 06361 which has fixed bonding issue

KB925 pin 139 is used for XCLKO, Pin 140 NC

Security Classification	Compal Secret Data		
Issued Date	2006/08/04	Deciphered Date	2006/10/06

THIS SHEET OF ENGINEERING DRAWING IS THE PROPRIETARY PROPERTY OF COMPAL ELECTRONICS, INC. AND CONTAINS CONFIDENTIAL AND TRADE SECRET INFORMATION. THIS SHEET MAY NOT BE TRANSFERED FROM THE CUSTODY OF THE COMPETENT DIVISION OF R&D DEPARTMENT EXCEPT AS AUTHORIZED BY COMPAL ELECTRONICS, INC. NEITHER THIS SHEET NOR THE INFORMATION IT CONTAINS MAY BE USED BY OR DISCLOSED TO ANY THIRD PARTY WITHOUT PRIOR WRITTEN CONSENT OF COMPAL ELECTRONICS, INC.

Compal Electronics, Inc.

Title: ENE-KB925

Size: Custom | Document Number: IEL10 LA-3451P | Rev: 0.1

Date: Friday, February 09, 2007 | Sheet 34 of 53

INT_KBD Conn.

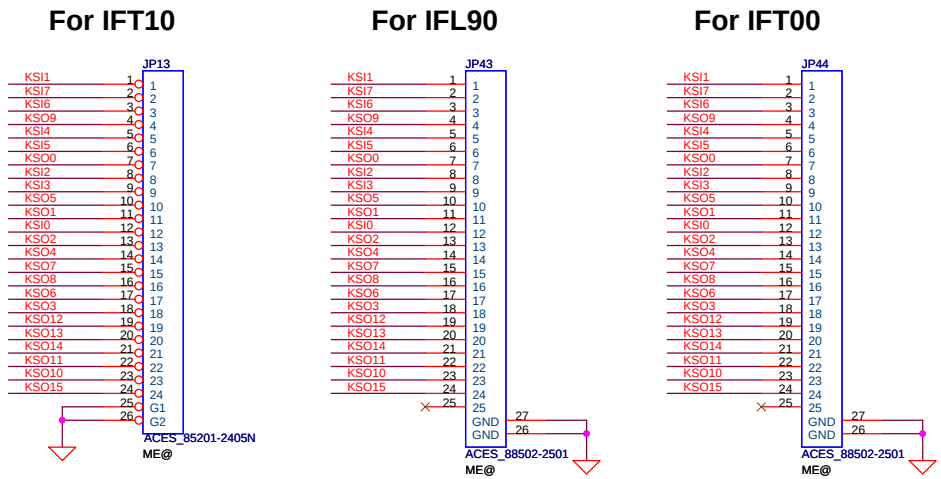

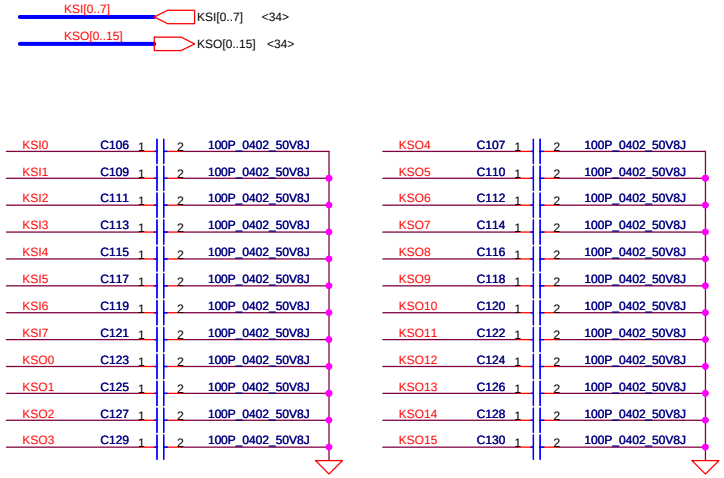

Switch Board Conn.

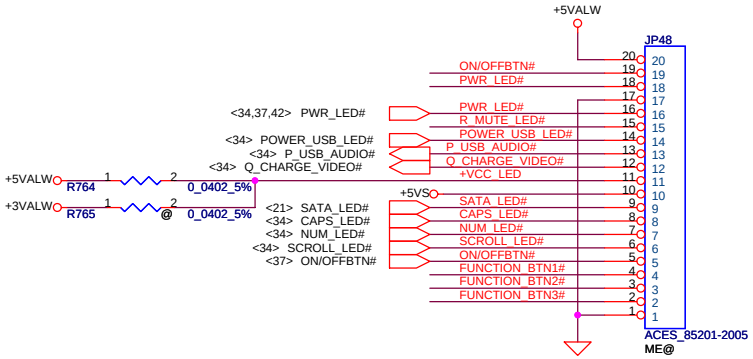

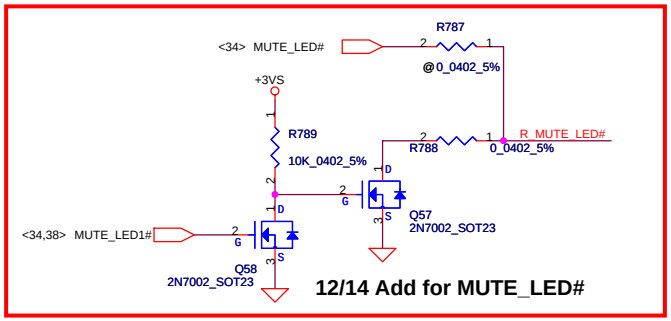

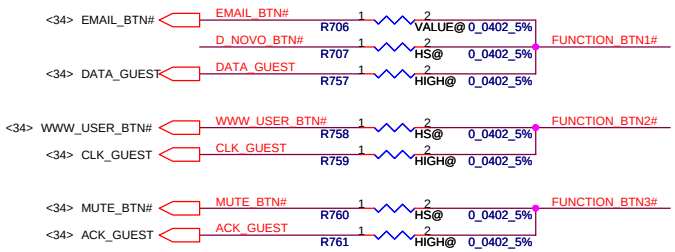

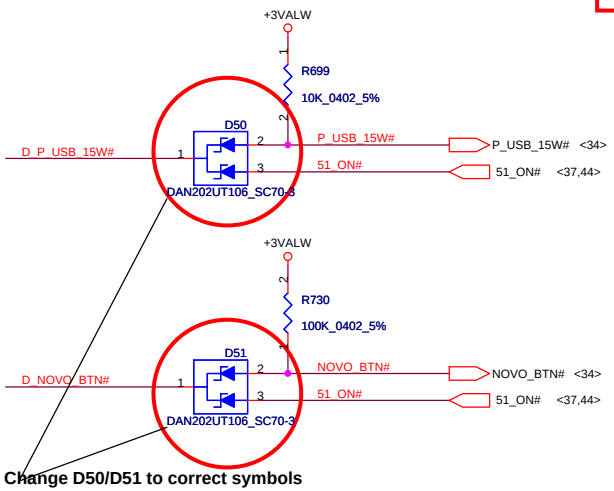

12/4 Change D50/D51 to correct symbols

Video Switch Board Conn.

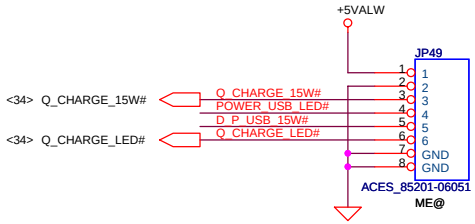

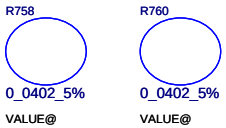

Security Classification	Compal Secret Data			Compal Electronics, Inc.
Issued Date	2006/08/18	Deciphered Date	2007/8/18	Title: EC ENE KB910L(Reserved)
				Size: B; Document Number: IFTXX M/B LA-3541P Schematic; Rev: 0
				Date: Friday, February 09, 2007; Sheet 35 of 53

THIS SHEET OF ENGINEERING DRAWING IS THE PROPRIETARY PROPERTY OF COMPAL ELECTRONICS, INC. AND CONTAINS CONFIDENTIAL AND TRADE SECRET INFORMATION. THIS SHEET MAY NOT BE TRANSFERED FROM THE CUSTODY OF THE COMPETENT DIVISION OF R&D DEPARTMENT EXCEPT AS AUTHORIZED BY COMPAL ELECTRONICS, INC. NEITHER THIS SHEET NOR THE INFORMATION IT CONTAINS MAY BE USED BY OR DISCLOSED TO ANY THIRD PARTY WITHOUT PRIOR WRITTEN CONSENT OF COMPAL ELECTRONICS, INC.

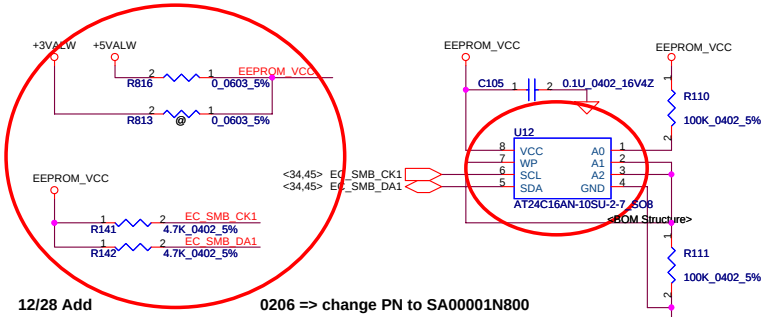

12/28 Add

0206 => change PN to SA00001N800

12/19 change pn to SA00001MP00 (original part EOL)

12/25 change back to SA024160140 (Samples can not on time)

8M SPI ROM

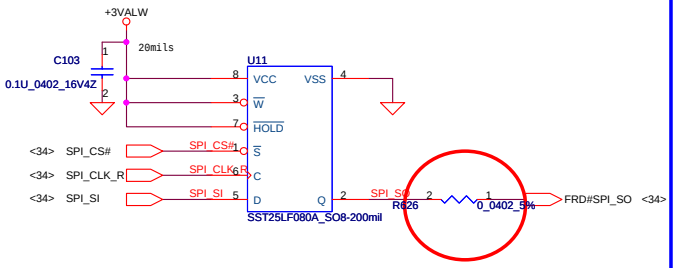

12/15 change from 15 to 0 ohm'

To TP/B Conn.

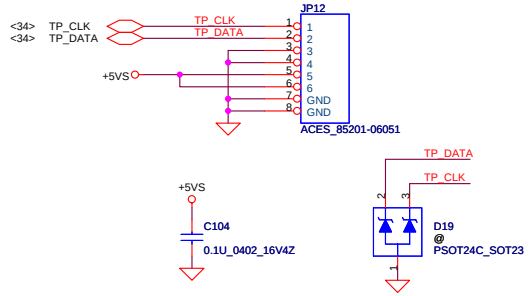

Update Footprint

Bluetooth Conn.

Need to check BT pin definition again!

9/20 modified this block

For 15W BT Conn. located at Right corner

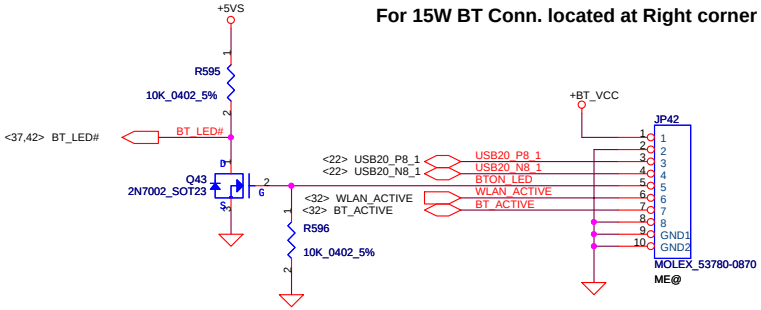

For 14W BT Conn. located at Left corner

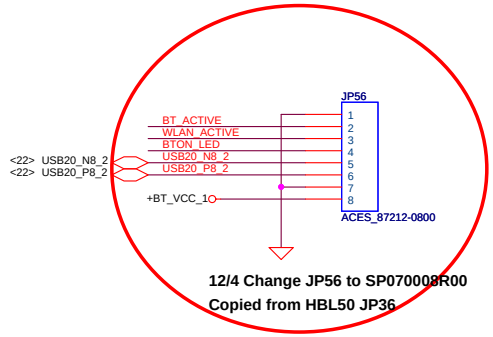

12/4 Change JP56 to SP070008R00

Copied from HBL50 JP36

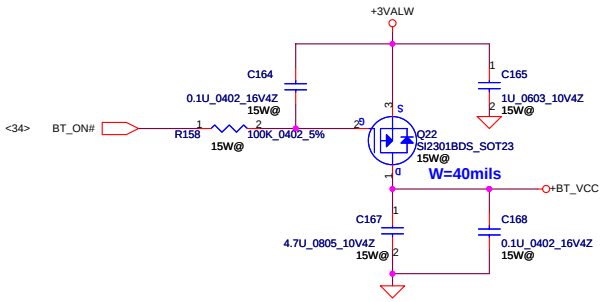

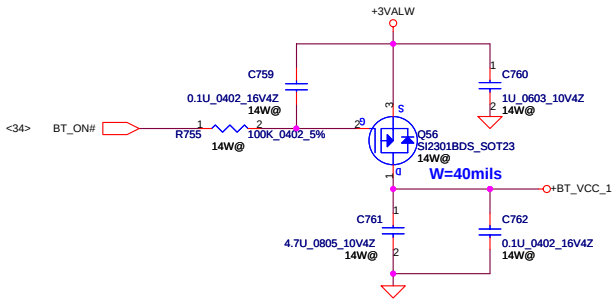

FOR LPC DEBUG PORT

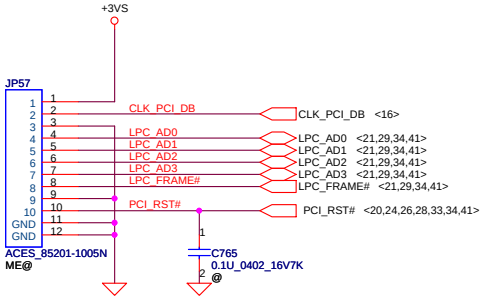

FOR LPC SIO DEBUG PORT

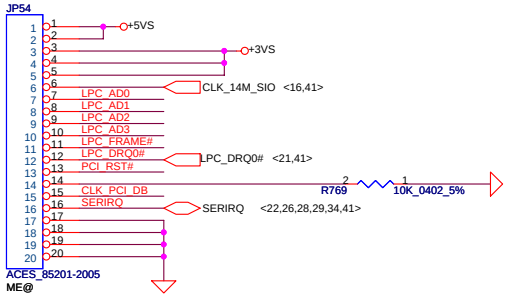

Security Classification	Compal Secret Data		
Issued Date	2006/08/18	Deciphered Date	2007/8/18

THIS SHEET OF ENGINEERING DRAWING IS THE PROPRIETARY PROPERTY OF COMPAL ELECTRONICS, INC. AND CONTAINS CONFIDENTIAL AND TRADE SECRET INFORMATION. THIS SHEET MAY NOT BE TRANSFERED FROM THE CUSTODY OF THE COMPETENT DIVISION OF R&D DEPARTMENT EXCEPT AS AUTHORIZED BY COMPAL ELECTRONICS, INC. NEITHER THIS SHEET NOR THE INFORMATION IT CONTAINS MAY BE USED BY OR DISCLOSED TO ANY THIRD PARTY WITHOUT PRIOR WRITTEN CONSENT OF COMPAL ELECTRONICS, INC.

Compal Electronics, Inc.

Title: BIOS, I/O Port & K/B Connector

Size: B | Document Number: IFTXX M/B LA-3541P Schematic | Rev: 0

Date: Friday, February 09, 2007 | Sheet 36 of 53

ON/OFF switch

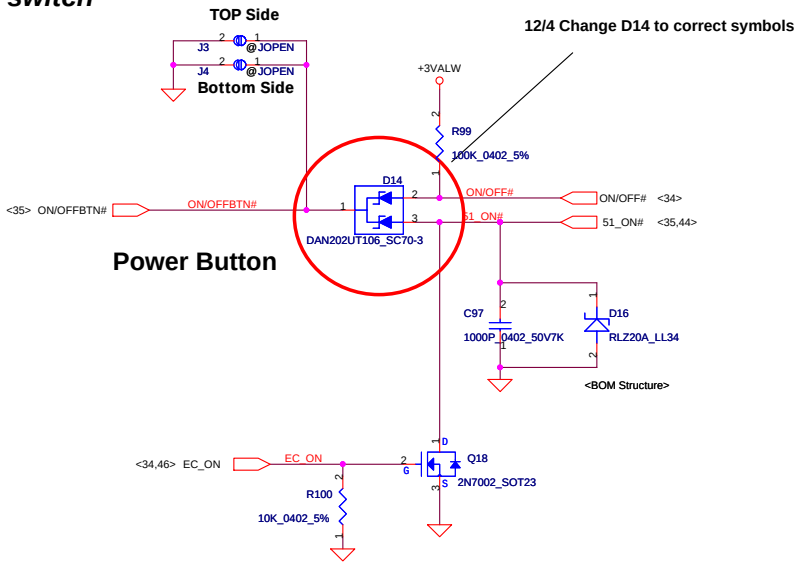

Front LED Board

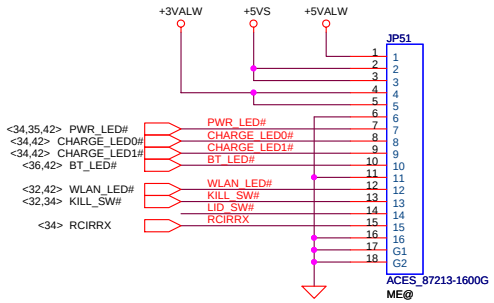

Lid Switch

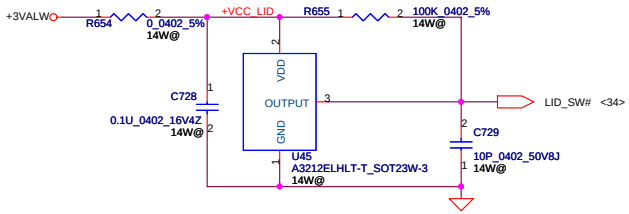

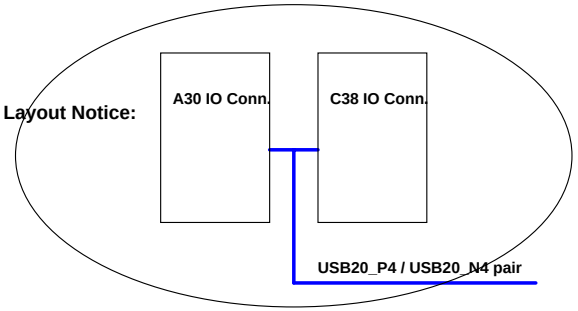

0208 Add 220pF for EMI

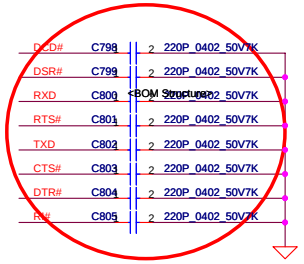

0207 Add JP59 0209 Change Symbol for GND PAD

For 15W IO Conn.

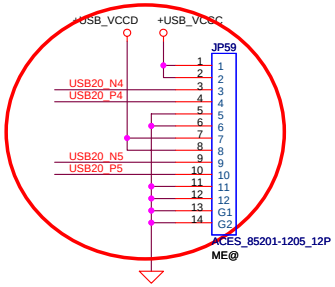

For 14W IO Conn.

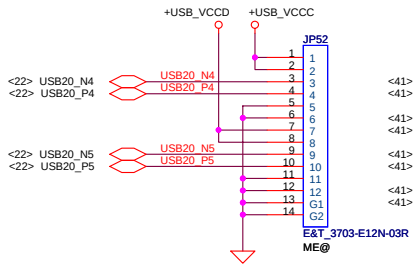

For C38 IO Conn.

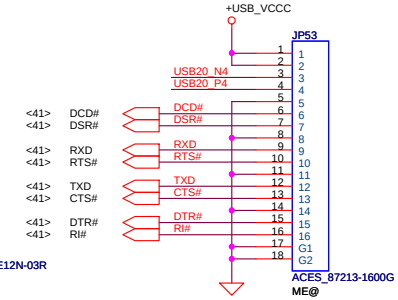

To USB CONN. 3

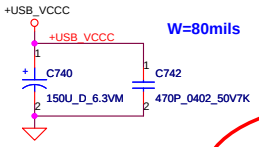

To USB CONN. 4

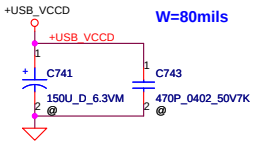

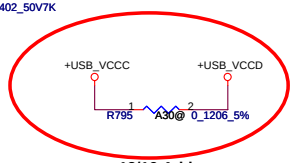

12/19 Add

12/27 modified to A30@

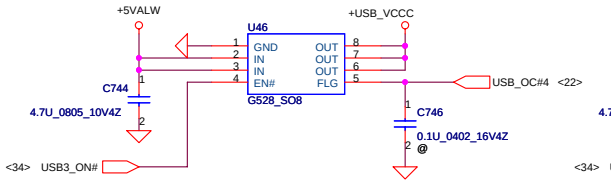

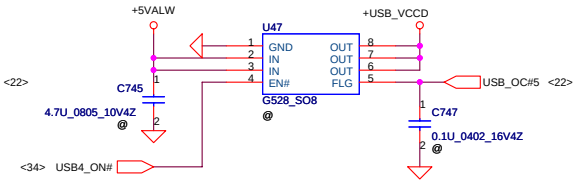

Security Classification	Compal Secret Data		
Issued Date	2006/08/18	Deciphered Date	2007/8/18

THIS SHEET OF ENGINEERING DRAWING IS THE PROPRIETARY PROPERTY OF COMPAL ELECTRONICS, INC. AND CONTAINS CONFIDENTIAL AND TRADE SECRET INFORMATION. THIS SHEET MAY NOT BE TRANSFERRED FROM THE CUSTODY OF THE COMPETENT DIVISION OF R&D DEPARTMENT EXCEPT AS AUTHORIZED BY COMPAL ELECTRONICS, INC. NEITHER THIS SHEET NOR THE INFORMATION IT CONTAINS MAY BE USED BY OR DISCLOSED TO ANY THIRD PARTY WITHOUT PRIOR WRITTEN CONSENT OF COMPAL ELECTRONICS, INC.

Compal Electronics, Inc.

Title: Power OK, Reset and RTC Circuit, TP

Size: B | Document Number: IFTXX M/B LA-3541P Schematic | Rev: 0

Date: Friday, February 09, 2007 | Sheet 37 of 53

HD Audio Codec

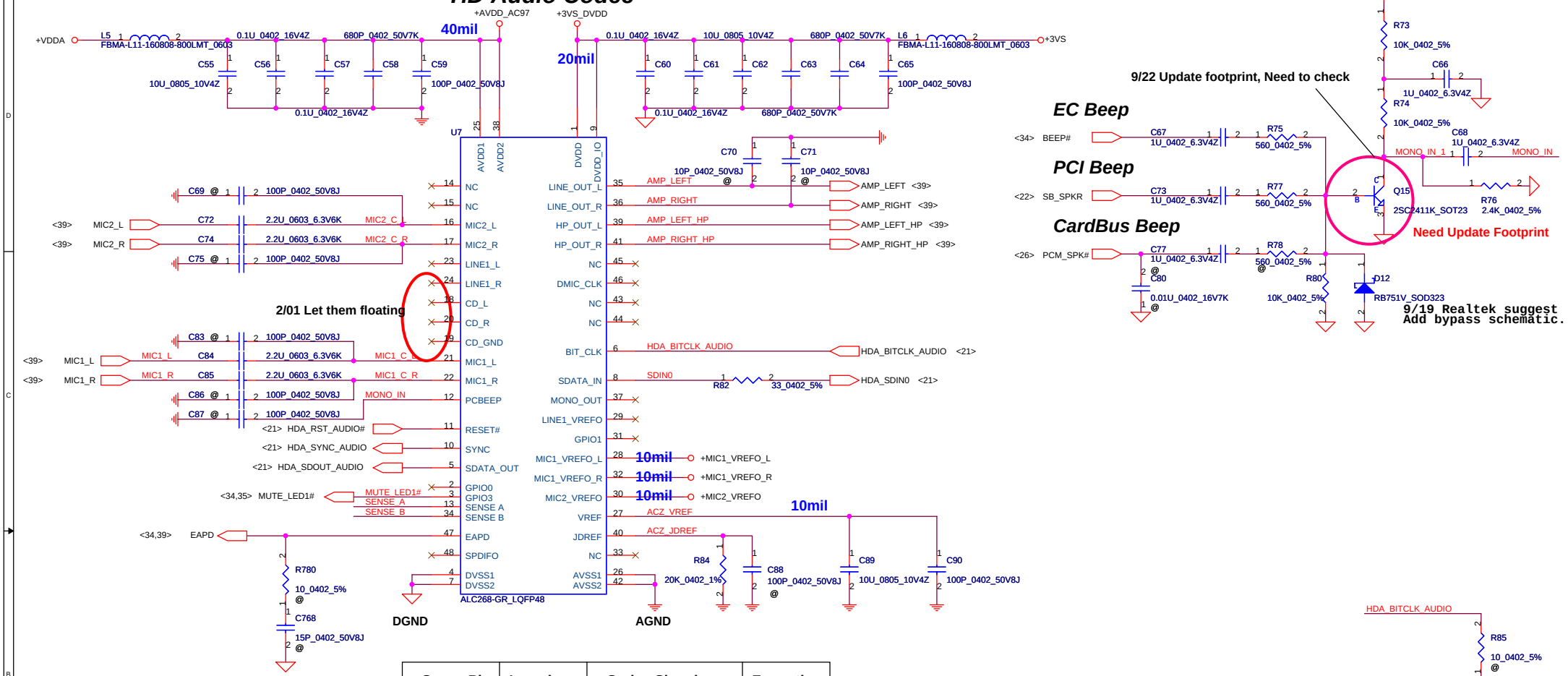

EC Beep

SENSE FOR Ext. Mic.

SENSE FOR Solo Int. Mic.

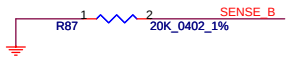

SENSE FOR HP

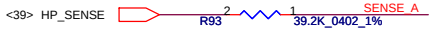

Sense Pin	Impedance	Codec Signals	Funnction
SENSE A / B	39.2K	PORT-A (PIN 39, 41)	HP
	20K	PORT-B (PIN 21, 22)	MIC
	10K	PORT-C (PIN 23, 24)	LINE IN
	5.1K	PORT-D (PIN 35, 36)	LINE Out
SENSE B	39.2K	PORT-E (PIN 14, 15)	HP
	20K	PORT-F (PIN 16, 17)	MIC
	10K	PORT-G (PIN 43, 44)	LINE IN
	5.1K	PORT-H (PIN 45, 46)	LINE Out

Moat Bridge

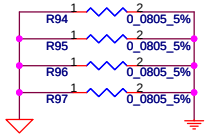

Regulator for CODEC

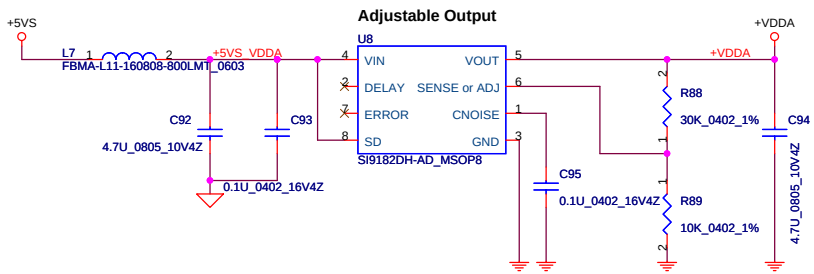

Security Classification	Compal Secret Data		
Issued Date	2006/08/05	Deciphered Date	2007/08/05

THIS SHEET OF ENGINEERING DRAWING IS THE PROPRIETARY PROPERTY OF COMPAL ELECTRONICS, INC. AND CONTAINS CONFIDENTIAL AND TRADE SECRET INFORMATION. THIS SHEET MAY NOT BE TRANSFERED FROM THE CUSTODY OF THE COMPETENT DIVISION OF R&D DEPARTMENT EXCEPT AS AUTHORIZED BY COMPAL ELECTRONICS, INC. NEITHER THIS SHEET NOR THE INFORMATION IT CONTAINS MAY BE USED BY OR DISCLOSED TO ANY THIRD PARTY WITHOUT PRIOR WRITTEN CONSENT OF COMPAL ELECTRONICS, INC.

Compal Electronics, Inc.

Title: <Title> HD Audio Codec ALC268

Size: Custom | Document Number: LA-3541P | Rev: 0.1

Date: Friday, February 09, 2007 | Sheet 38 of 53

APA2056 SPK/HP Amplifier

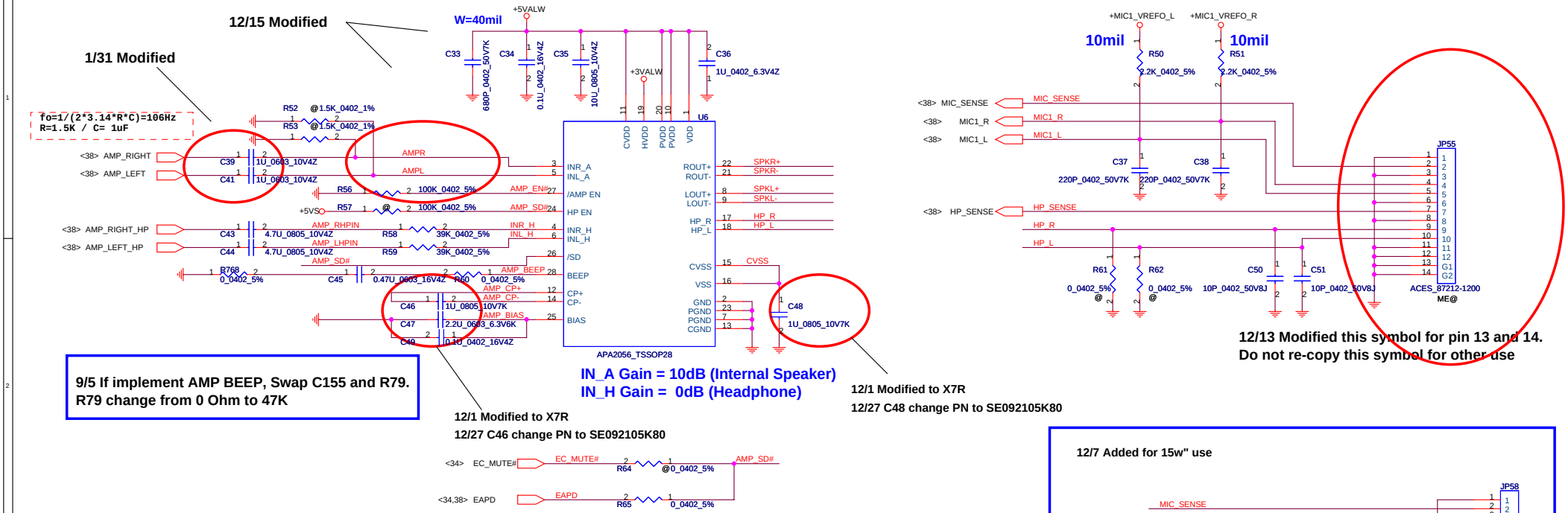

9/5 If implement AMP BEEP, Swap C155 and R79.
R79 change from 0 Ohm to 47K

<34> EC_MUTE# — EC_MUTE# — R64 @0_0402_5% — AMP_SD#

<34,38> EAPD — EAPD — R65 0_0402_5%

12/7 Added for 15w" use

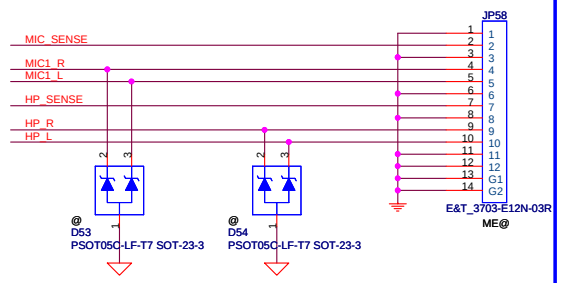

SINGLE INT MIC/DUAL INT MIC

2/01 Add D52 for INT MIC use(PN:SCD0T05CA20)

For EMI Request
0208 => Change L57 , L58 from @ to mount
Change R781 , R782 from mount to @

D52 is a modified symbol

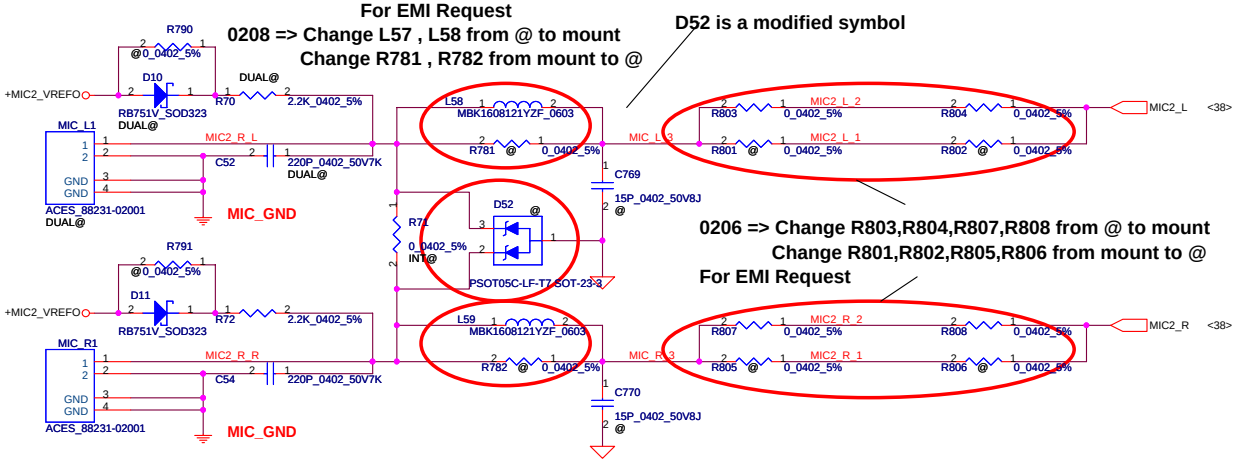

0206 => Change R803,R804,R807,R808 from @ to mount
Change R801,R802,R805,R806 from mount to @
For EMI Request

1/31 change JP9 following JP50

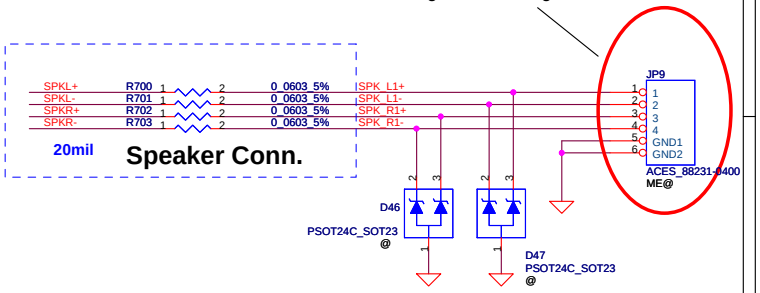

0208 => Remove R797 , Add L63 For EMI Request

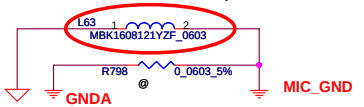

12/21 Place these parts close to CODEC (U7)

Security Classification	Compal Secret Data		
Issued Date	2006/08/05	Deciphered Date	2007/08/05

THIS SHEET OF ENGINEERING DRAWING IS THE PROPRIETARY PROPERTY OF COMPAL ELECTRONICS, INC. AND CONTAINS CONFIDENTIAL AND TRADE SECRET INFORMATION. THIS SHEET MAY NOT BE TRANSFERED FROM THE CUSTODY OF THE COMPETENT DIVISION OF R&D DEPARTMENT EXCEPT AS AUTHORIZED BY COMPAL ELECTRONICS, INC. NEITHER THIS SHEET NOR THE INFORMATION IT CONTAINS MAY BE USED BY OR DISCLOSED TO ANY THIRD PARTY WITHOUT PRIOR WRITTEN CONSENT OF COMPAL ELECTRONICS, INC.

Compal Electronics, Inc.

Title: AMP/VR/Audio Jack/MIC

Size: Custom | Document Number: LA-3541P | Rev: 0.1

Date: Thursday, February 15, 2007 | Sheet 39 of 53

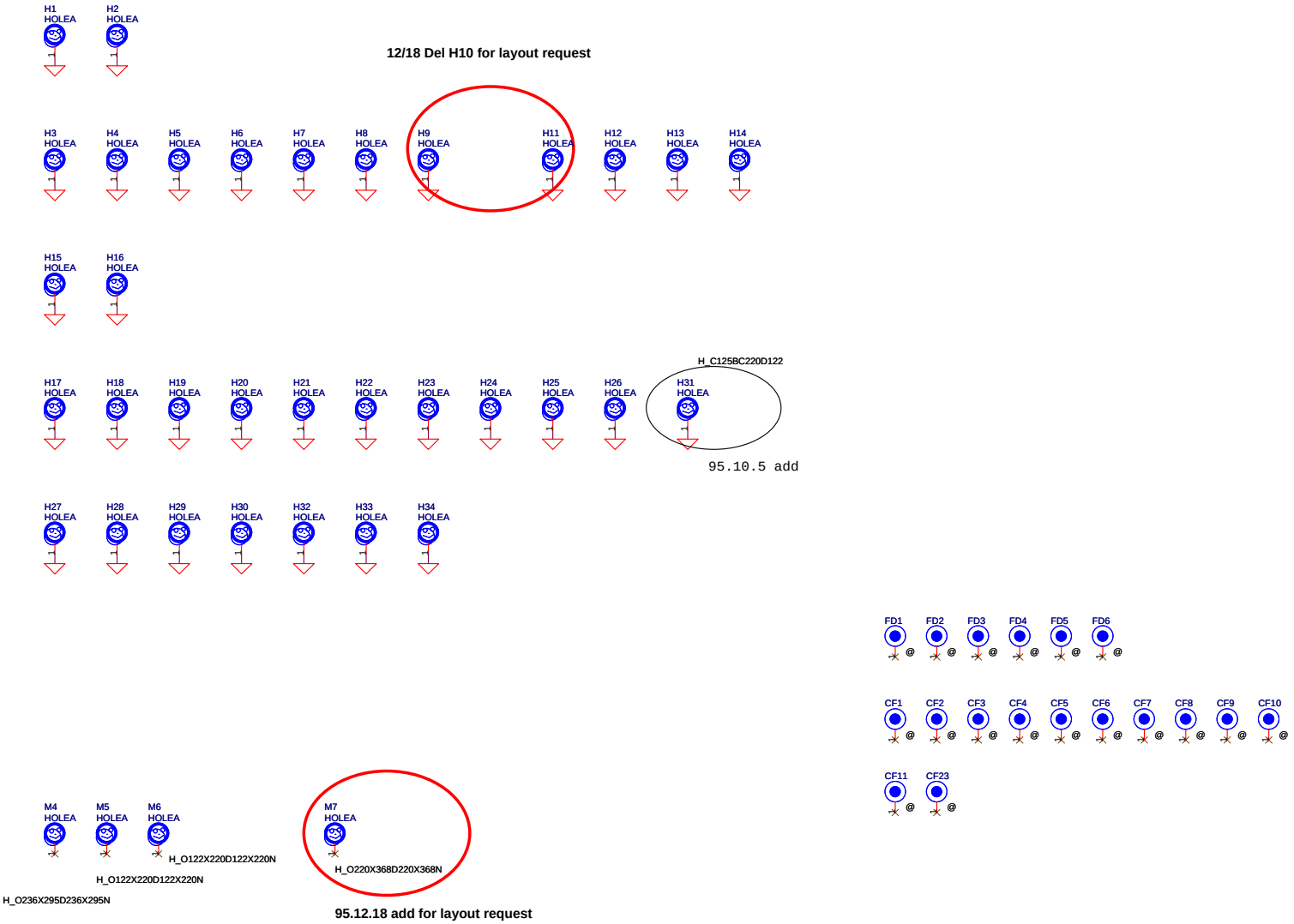

Security Classification	Compal Secret Data		
Issued Date	2006/08/18	Deciphered Date	2007/8/18

THIS SHEET OF ENGINEERING DRAWING IS THE PROPRIETARY PROPERTY OF COMPAL ELECTRONICS, INC. AND CONTAINS CONFIDENTIAL AND TRADE SECRET INFORMATION. THIS SHEET MAY NOT BE TRANSFERED FROM THE CUSTODY OF THE COMPETENT DIVISION OF R&D DEPARTMENT EXCEPT AS AUTHORIZED BY COMPAL ELECTRONICS, INC. NEITHER THIS SHEET NOR THE INFORMATION IT CONTAINS MAY BE USED BY OR DISCLOSED TO ANY THIRD PARTY WITHOUT PRIOR WRITTEN CONSENT OF COMPAL ELECTRONICS, INC.

Compal Electronics, Inc.

Title: FAN & Screw Hole

Size: B | Document Number: IFTXX M/B LA-3541P Schematic | Rev: 0

Date: Thursday, February 08, 2007 | Sheet 40 of 53

SUPER I/O SMsC LPC47N217

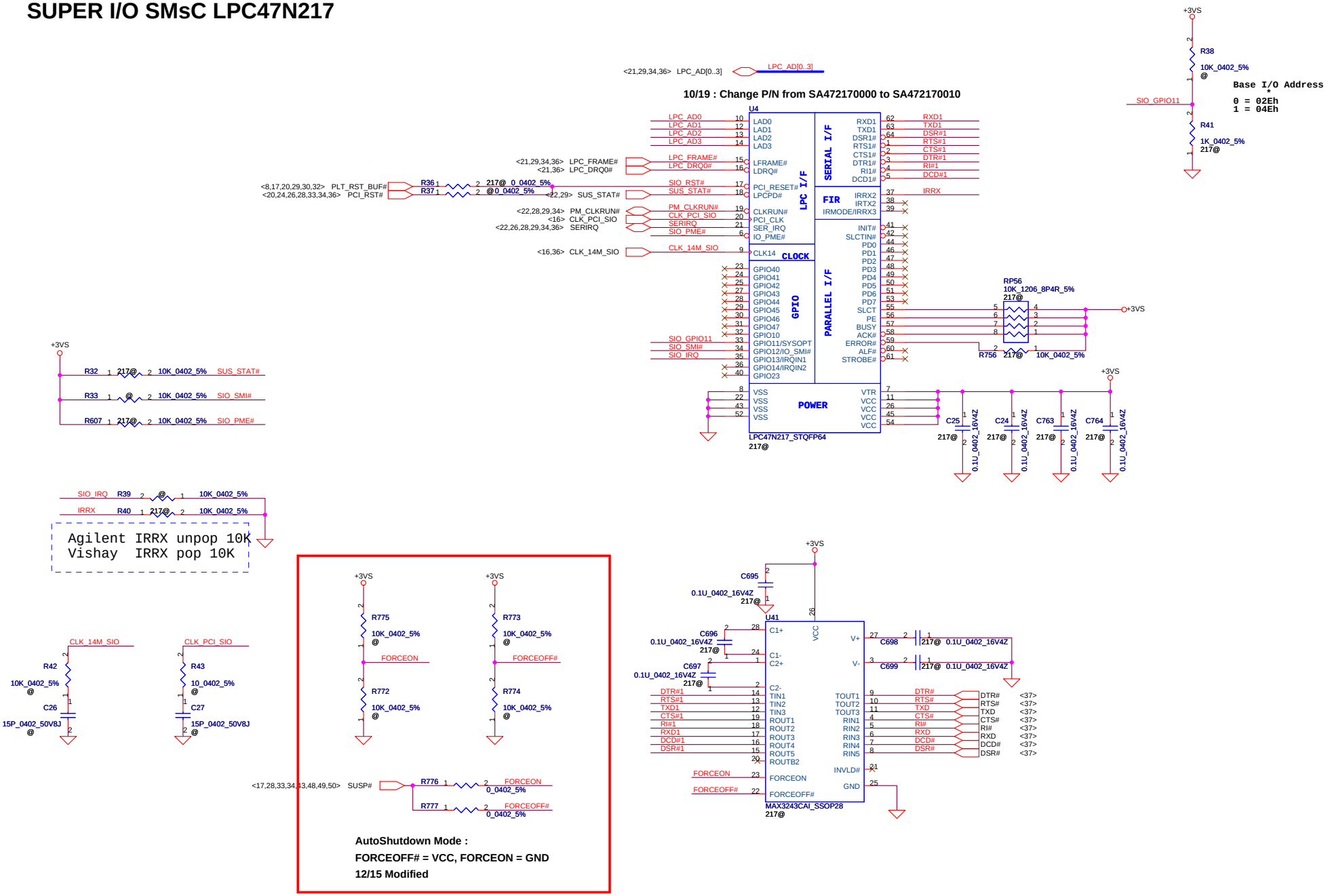

9/18 modify this page following IGT1x

Security Classification	Compal Secret Data		
Issued Date	2005/05/26	Deciphered Date	2006/07/26

THIS SHEET OF ENGINEERING DRAWING IS THE PROPRIETARY PROPERTY OF COMPAL ELECTRONICS, INC. AND CONTAINS CONFIDENTIAL AND TRADE SECRET INFORMATION. THIS SHEET MAY NOT BE TRANSFERED FROM THE CUSTODY OF THE COMPETENT DIVISION OF R&D DEPARTMENT EXCEPT AS AUTHORIZED BY COMPAL ELECTRONICS, INC. NEITHER THIS SHEET NOR THE INFORMATION IT CONTAINS MAY BE USED BY OR DISCLOSED TO ANY THIRD PARTY WITHOUT PRIOR WRITTEN CONSENT OF COMPAL ELECTRONICS, INC.

Compal Electronics, Inc.

Title: **SUPER I/O LPC47N217**

Size: | Document Number: **LA-3541P UMA** | Rev: 0.2

Date: Friday, February 09, 2007 | Sheet 41 of 53

MDC Conn.

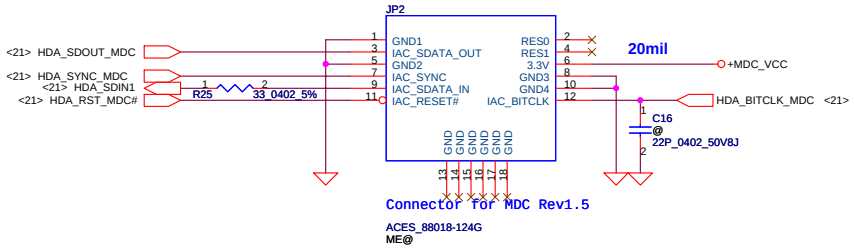

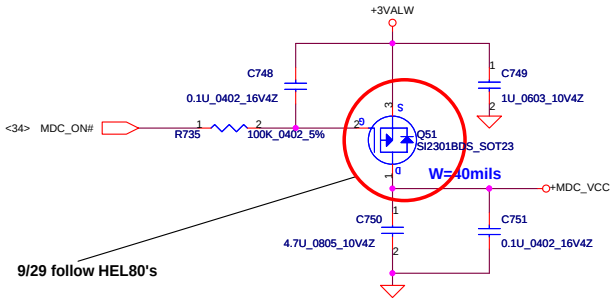

Camera Conn

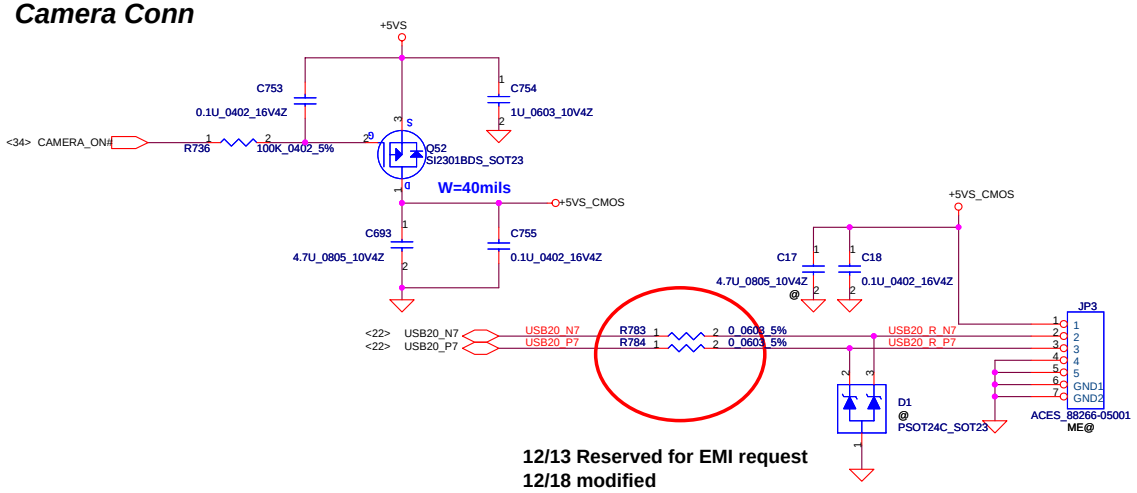

Finger Print board

1/05 Modified D3 to SCA00000A00 For EMI
0208 Remove D3 , Add D55 (SC300000G00)

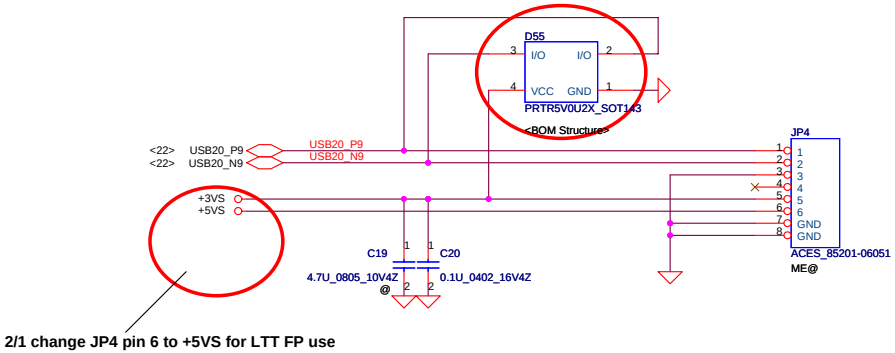

LED

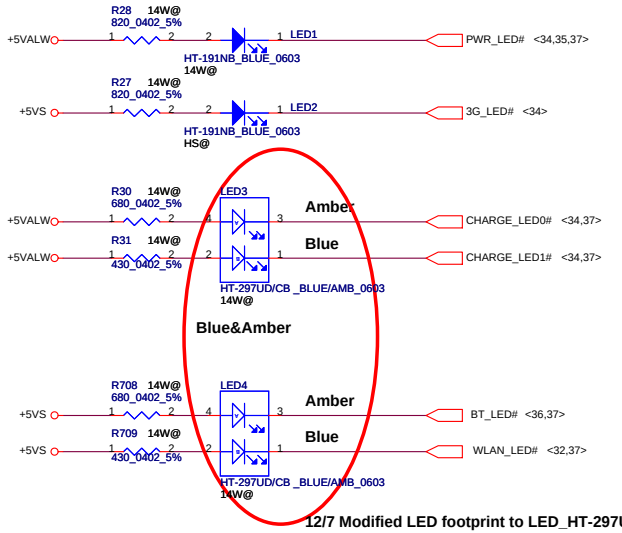

12/7 Modified LED footprint to LED_HT-297UD-CB_4P
12/15 Modified to correct LED symbol!

Security Classification	Compal Secret Data		
Issued Date	2006/08/18	Deciphered Date	2007/8/18

THIS SHEET OF ENGINEERING DRAWING IS THE PROPRIETARY PROPERTY OF COMPAL ELECTRONICS, INC. AND CONTAINS CONFIDENTIAL AND TRADE SECRET INFORMATION. THIS SHEET MAY NOT BE TRANSFERED FROM THE CUSTODY OF THE COMPETENT DIVISION OF R&D DEPARTMENT EXCEPT AS AUTHORIZED BY COMPAL ELECTRONICS, INC. NEITHER THIS SHEET NOR THE INFORMATION IT CONTAINS MAY BE USED BY OR DISCLOSED TO ANY THIRD PARTY WITHOUT PRIOR WRITTEN CONSENT OF COMPAL ELECTRONICS, INC.

Compal Electronics, Inc.

Title: MDC/CIR & LED

Size: B | Document Number: IFTXX M/B LA-3541P Schematic | Rev: 0

Date: Thursday, February 15, 2007 | Sheet 42 of 53

1/18 Change U3 PN from
SB000009580 to SB000005D80

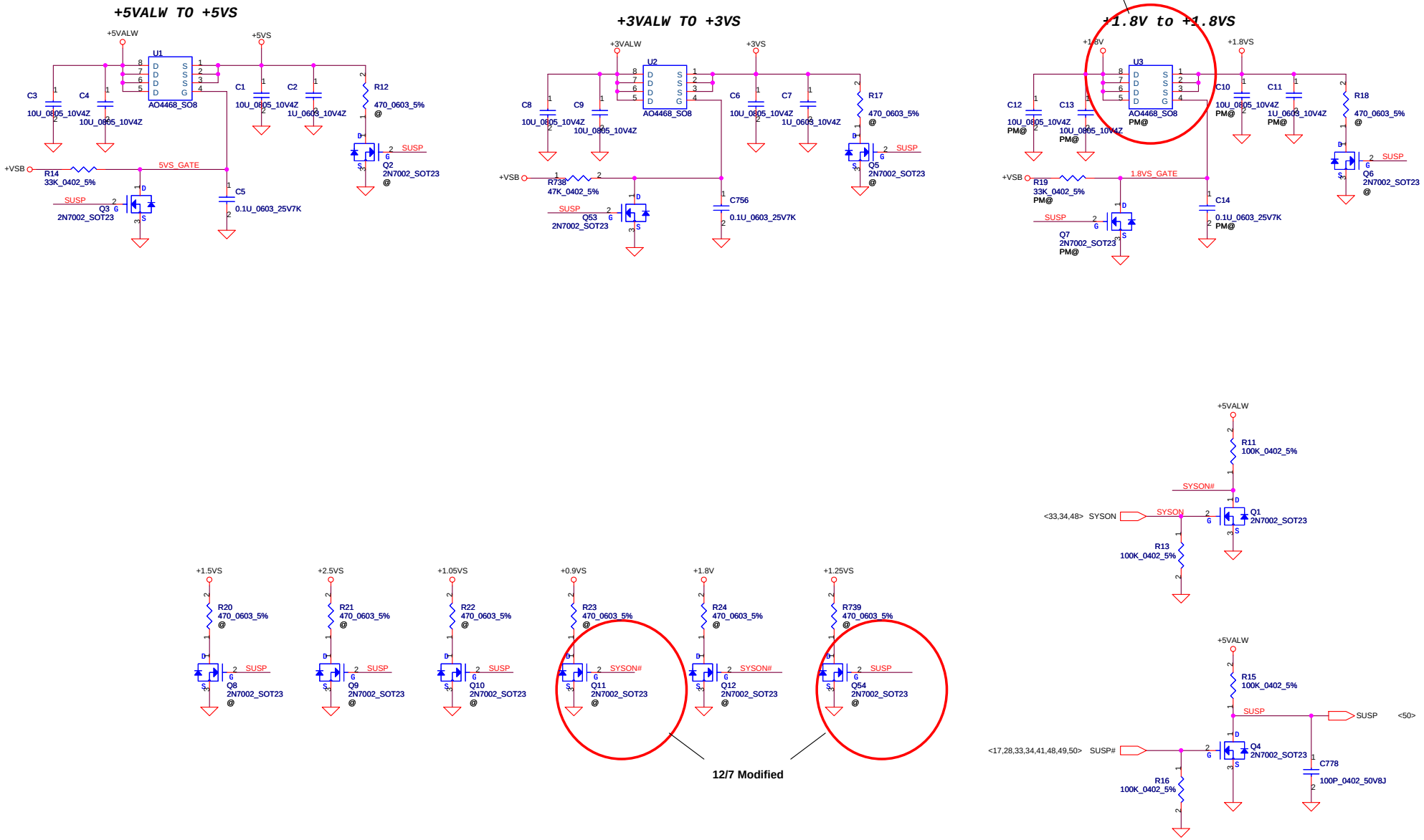

Security Classification	Compal Secret Data		
Issued Date	2006/08/18	Deciphered Date	2007/8/18

THIS SHEET OF ENGINEERING DRAWING IS THE PROPRIETARY PROPERTY OF COMPAL ELECTRONICS, INC. AND CONTAINS CONFIDENTIAL AND TRADE SECRET INFORMATION. THIS SHEET MAY NOT BE TRANSFERED FROM THE CUSTODY OF THE COMPETENT DIVISION OF R&D DEPARTMENT EXCEPT AS AUTHORIZED BY COMPAL ELECTRONICS, INC. NEITHER THIS SHEET NOR THE INFORMATION IT CONTAINS MAY BE USED BY OR DISCLOSED TO ANY THIRD PARTY WITHOUT PRIOR WRITTEN CONSENT OF COMPAL ELECTRONICS, INC.

Compal Electronics, Inc.

Title: DC Interface

Size: B | Document Number: IFTXX M/B LA-3541P Schematic | Rev: 0

Date: Thursday, February 08, 2007 | Sheet 43 of 53

DC301001Y00

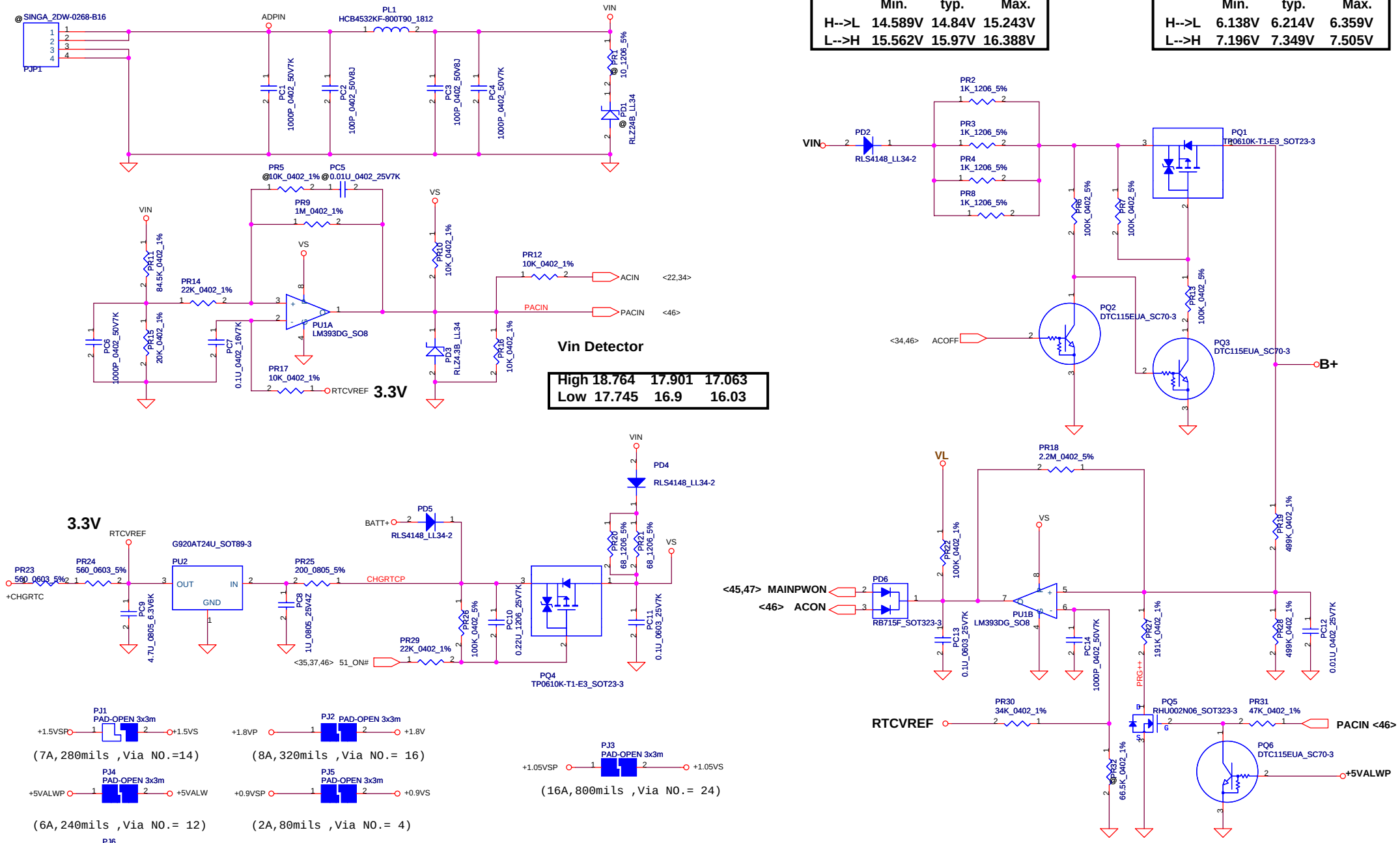

ACIN

Precharge detector	Min.	typ.	Max.
H-->L	14.589V	14.84V	15.243V
L-->H	15.562V	15.97V	16.388V

BATT ONLY

Precharge detector	Min.	typ.	Max.
H-->L	6.138V	6.214V	6.359V
L-->H	7.196V	7.349V	7.505V

Security Classification	Compal Secret Data		
Issued Date	2005/10/17	Deciphered Date	2006/10/17

THIS SHEET OF ENGINEERING DRAWING IS THE PROPRIETARY PROPERTY OF COMPAL ELECTRONICS, INC. AND CONTAINS CONFIDENTIAL AND TRADE SECRET INFORMATION. THIS SHEET MAY NOT BE TRANSFERED FROM THE CUSTODY OF THE COMPETENT DIVISION OF R&D DEPARTMENT EXCEPT AS AUTHORIZED BY COMPAL ELECTRONICS, INC. NEITHER THIS SHEET NOR THE INFORMATION IT CONTAINS MAY BE USED BY OR DISCLOSED TO ANY THIRD PARTY WITHOUT PRIOR WRITTEN CONSENT OF COMPAL ELECTRONICS, INC.

Compal Electronics, Inc.

Title: **DCIN/DECTOR**

Size: B | Document Number | Rev: 0.2

Date: Friday, February 16, 2007 | Sheet 44 of 52

DC040003600

2/16 Change to 89 degree C for thermal request

PH1 under CPU botten side :
CPU thermal protection at 85 degree C
Recovery at 70 degree C

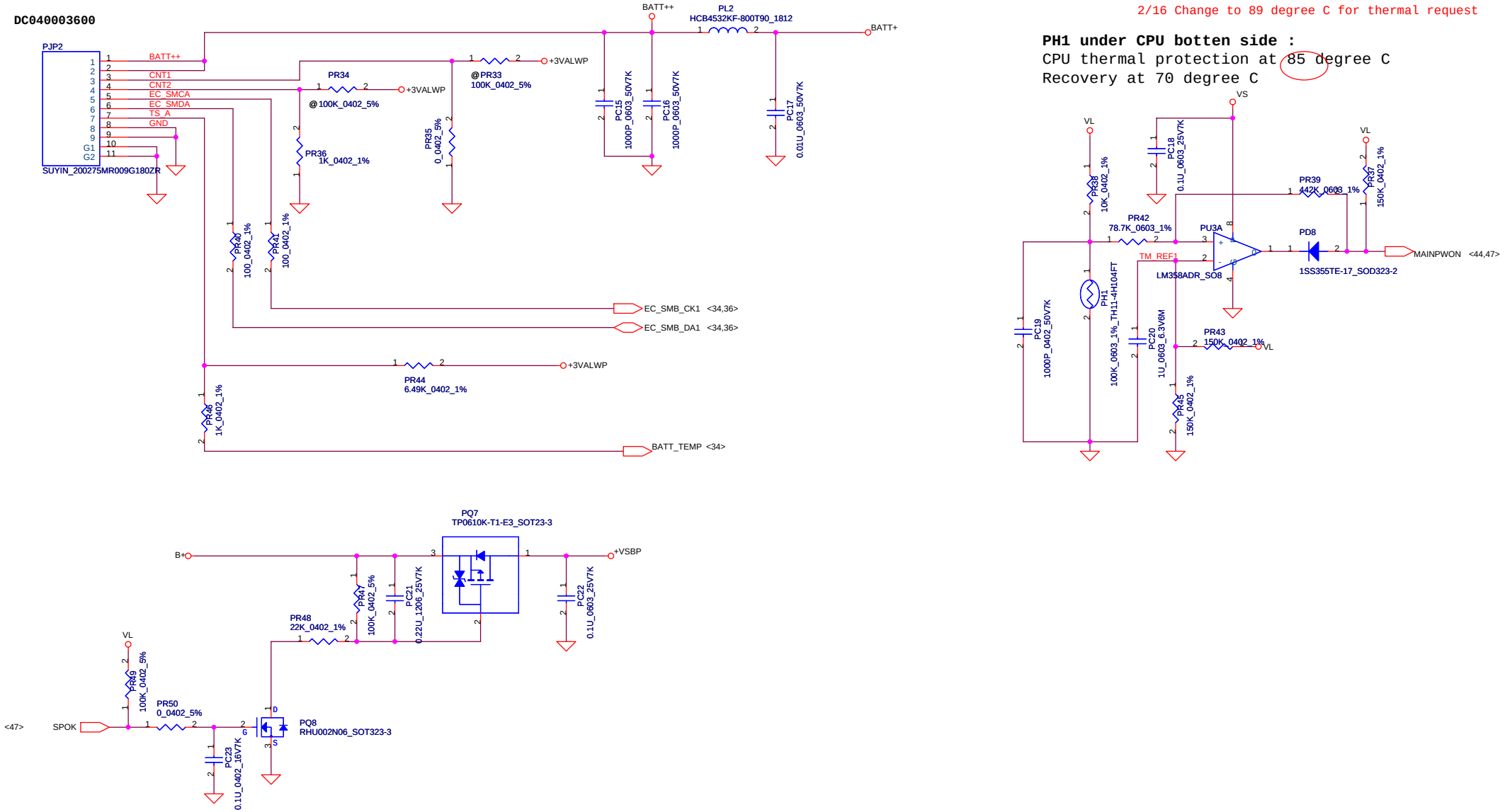

Security Classification	Compal Secret Data		
Issued Date	2005/10/17	Deciphered Date	2006/10/17

THIS SHEET OF ENGINEERING DRAWING IS THE PROPRIETARY PROPERTY OF COMPAL ELECTRONICS, INC. AND CONTAINS CONFIDENTIAL AND TRADE SECRET INFORMATION. THIS SHEET MAY NOT BE TRANSFERED FROM THE CUSTODY OF THE COMPETENT DIVISION OF R&D DEPARTMENT EXCEPT AS AUTHORIZED BY COMPAL ELECTRONICS, INC. NEITHER THIS SHEET NOR THE INFORMATION IT CONTAINS MAY BE USED BY OR DISCLOSED TO ANY THIRD PARTY WITHOUT PRIOR WRITTEN CONSENT OF COMPAL ELECTRONICS, INC.

Compal Electronics, Inc.

Title: **BATTERY CONN. / OTP**

Size: B | Document Number | Rev: 0.1

Date: Friday, February 16, 2007 | Sheet 45 of 52

65W, Iadapter=0~3.42A, Current sense=0.02ohm, PR69=39.2K, CP=3.079A
90W, Iadapter=0~4.74A, Current Sense=0.015ohm, PR69=28.7K, CP=4.263A

ADP_I = 19.9*Iadapter*Rsense

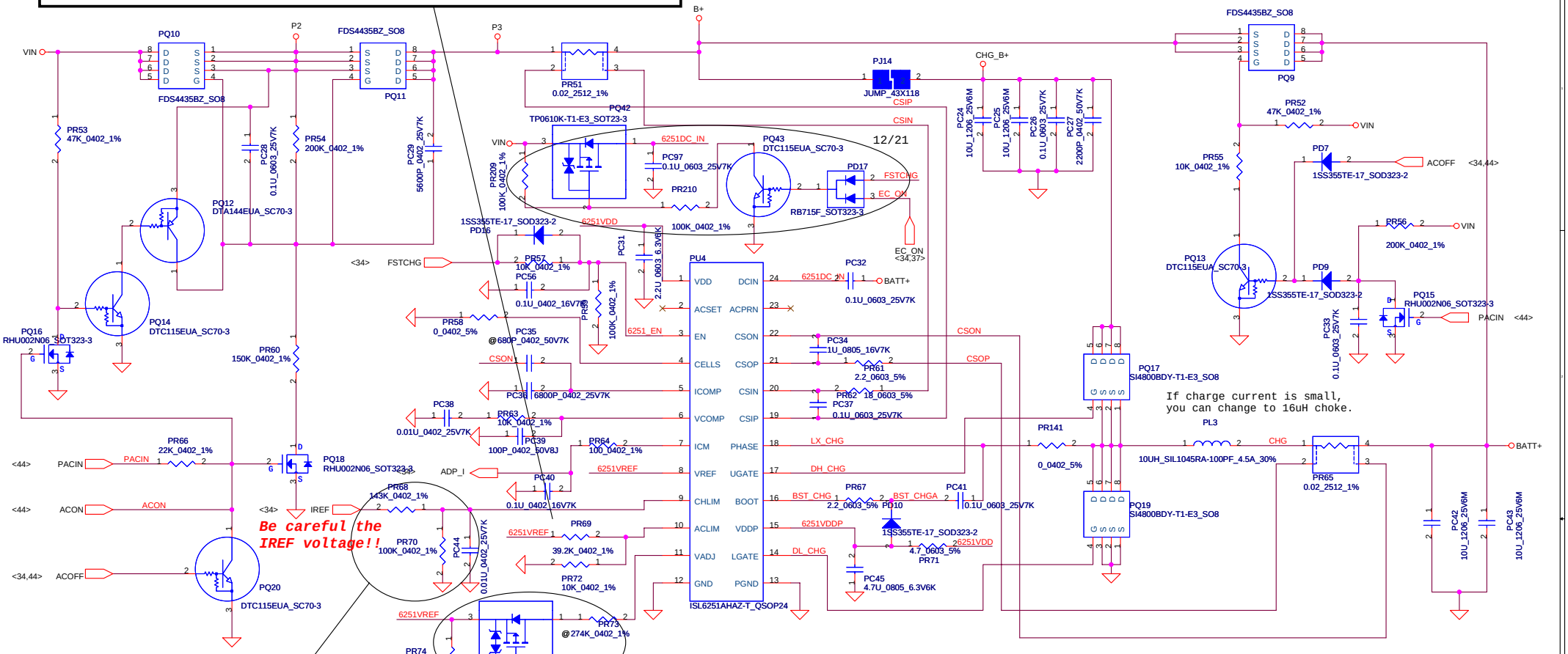

Be careful the IREF voltage!!

CP mode
Iinput=(1/0.02)(0.05*Vaclm/2.39+0.05)
where Vaclm=0.5535V, Iinput=3.079A
where Vaclm=0.6667V, Iinput=4.263A

CC=0.6~3.4A
VCHLM=0.24V~1.36V
IREF=0.972*Icharge
IREF=0.5832V~3.3V

If this area float, Charge voltage is 4.2V/cell

BATT Type	Charging Voltage (0x15)	CHGSEL	CV mode
2800mAH 3S pack	13050mV	LOW	12.90V
Normal 3S LI-ON Cells	12600mV	HIGH	12.60V

OVP voltage :
LI-3S :13.50V--BATT-OVP=1.5V
BATT-OVP=0.111*BATT+

Security Classification	Compal Secret Data		
Issued Date	2006/05/18	Deciphered Date	2007/05/18

THIS SHEET OF ENGINEERING DRAWING IS THE PROPRIETARY PROPERTY OF COMPAL ELECTRONICS, INC. AND CONTAINS CONFIDENTIAL AND TRADE SECRET INFORMATION. THIS SHEET MAY NOT BE TRANSFERED FROM THE CUSTODY OF THE COMPETENT DIVISION OF R&D DEPARTMENT EXCEPT AS AUTHORIZED BY COMPAL ELECTRONICS, INC. NEITHER THIS SHEET NOR THE INFORMATION IT CONTAINS MAY BE USED BY OR DISCLOSED TO ANY THIRD PARTY WITHOUT PRIOR WRITTEN CONSENT OF COMPAL ELECTRONICS, INC.

Compal Electronics, Inc.

Title: CHARGER

Size | Document Number: CHARGER | Rev 1.0

Date: Friday, February 16, 2007 | Sheet 46 of 52

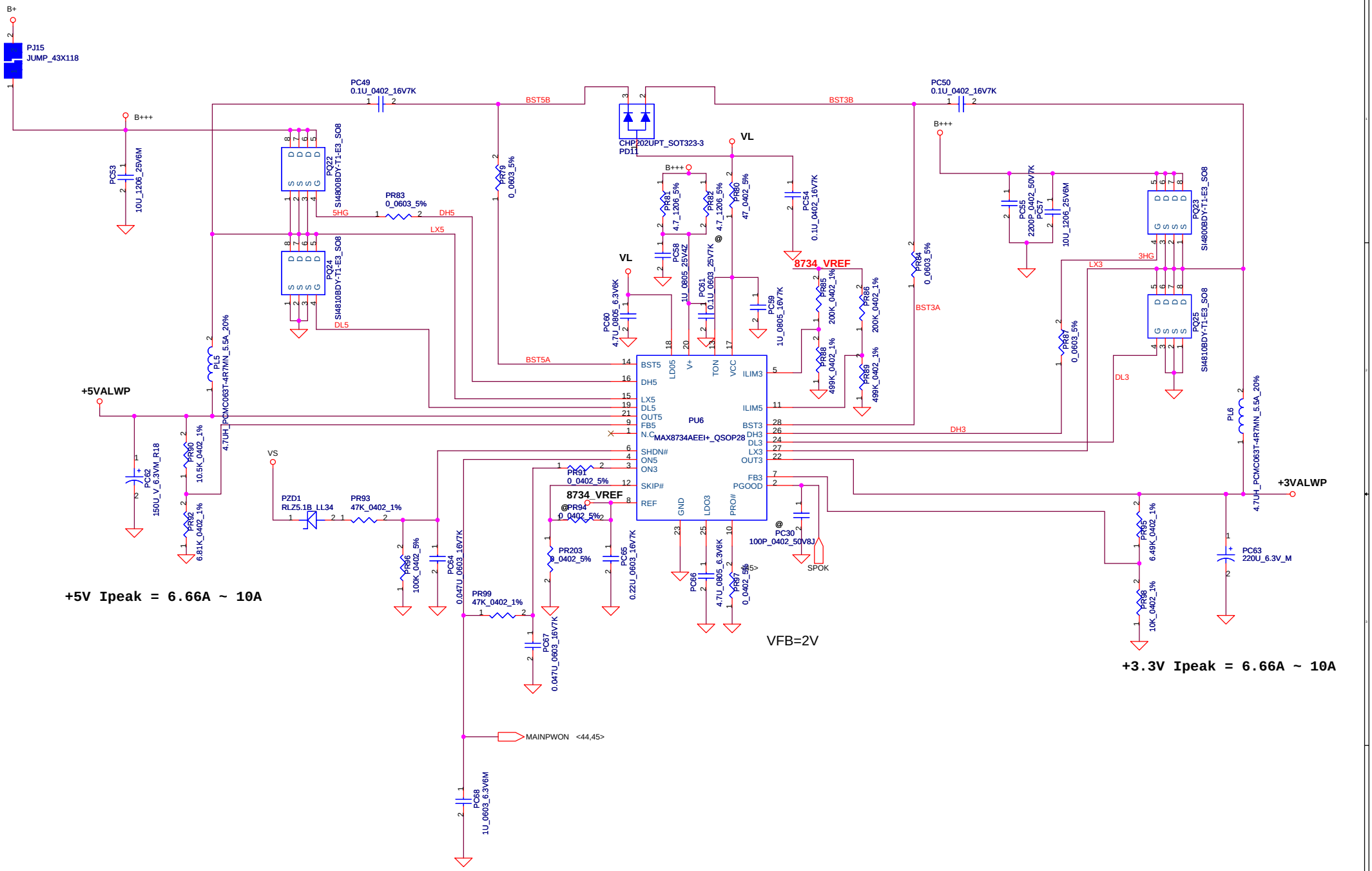

Security Classification	Compal Secret Data		
Issued Date	2005/10/17	Deciphered Date	2006/10/17

THIS SHEET OF ENGINEERING DRAWING IS THE PROPRIETARY PROPERTY OF COMPAL ELECTRONICS, INC. AND CONTAINS CONFIDENTIAL AND TRADE SECRET INFORMATION. THIS SHEET MAY NOT BE TRANSFERRED FROM THE CUSTODY OF THE COMPETENT DIVISION OF R&D DEPARTMENT EXCEPT AS AUTHORIZED BY COMPAL ELECTRONICS, INC. NEITHER THIS SHEET NOR THE INFORMATION IT CONTAINS MAY BE USED BY OR DISCLOSED TO ANY THIRD PARTY WITHOUT PRIOR WRITTEN CONSENT OF COMPAL ELECTRONICS, INC.

Compal Electronics, Inc.

Title: **+5VALWP/+3VALWP**

Size: Custom | Document Number | Rev: 0.1

Date: Friday, February 16, 2007 | Sheet 47 of 52

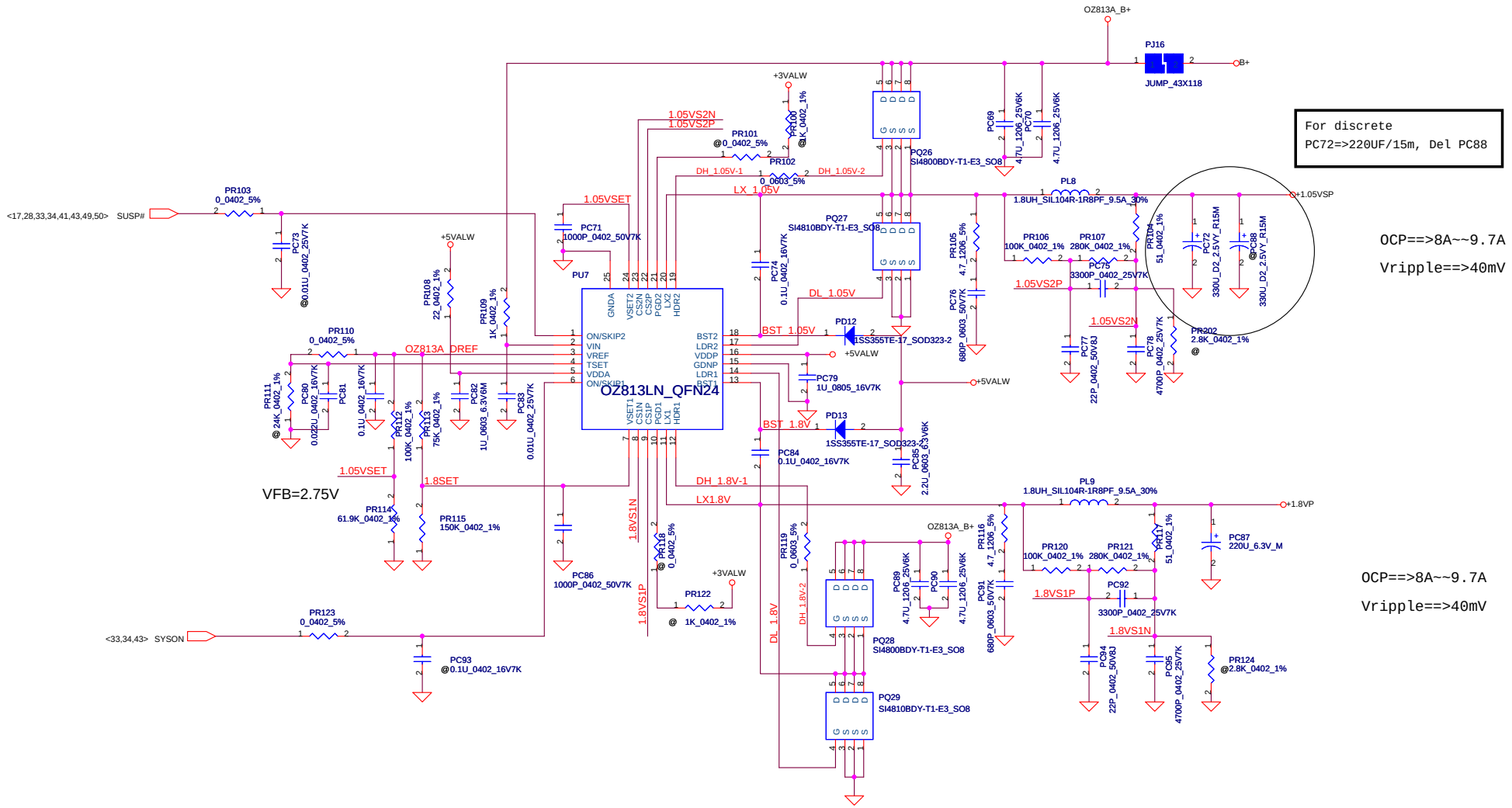

Security Classification	Compal Secret Data		
Issued Date	2005/10/17	Deciphered Date	2006/10/17

THIS SHEET OF ENGINEERING DRAWING IS THE PROPRIETARY PROPERTY OF COMPAL ELECTRONICS, INC. AND CONTAINS CONFIDENTIAL AND TRADE SECRET INFORMATION. THIS SHEET MAY NOT BE TRANSFERED FROM THE CUSTODY OF THE COMPETENT DIVISION OF R&D DEPARTMENT EXCEPT AS AUTHORIZED BY COMPAL ELECTRONICS, INC. NEITHER THIS SHEET NOR THE INFORMATION IT CONTAINS MAY BE USED BY OR DISCLOSED TO ANY THIRD PARTY WITHOUT PRIOR WRITTEN CONSENT OF COMPAL ELECTRONICS, INC.

Compal Electronics, Inc.

Title: **1.05VSP/1.8VP**

Size: Custom | Document Number | Rev: 0.1

Date: Friday, February 16, 2007 | Sheet 48 of 52

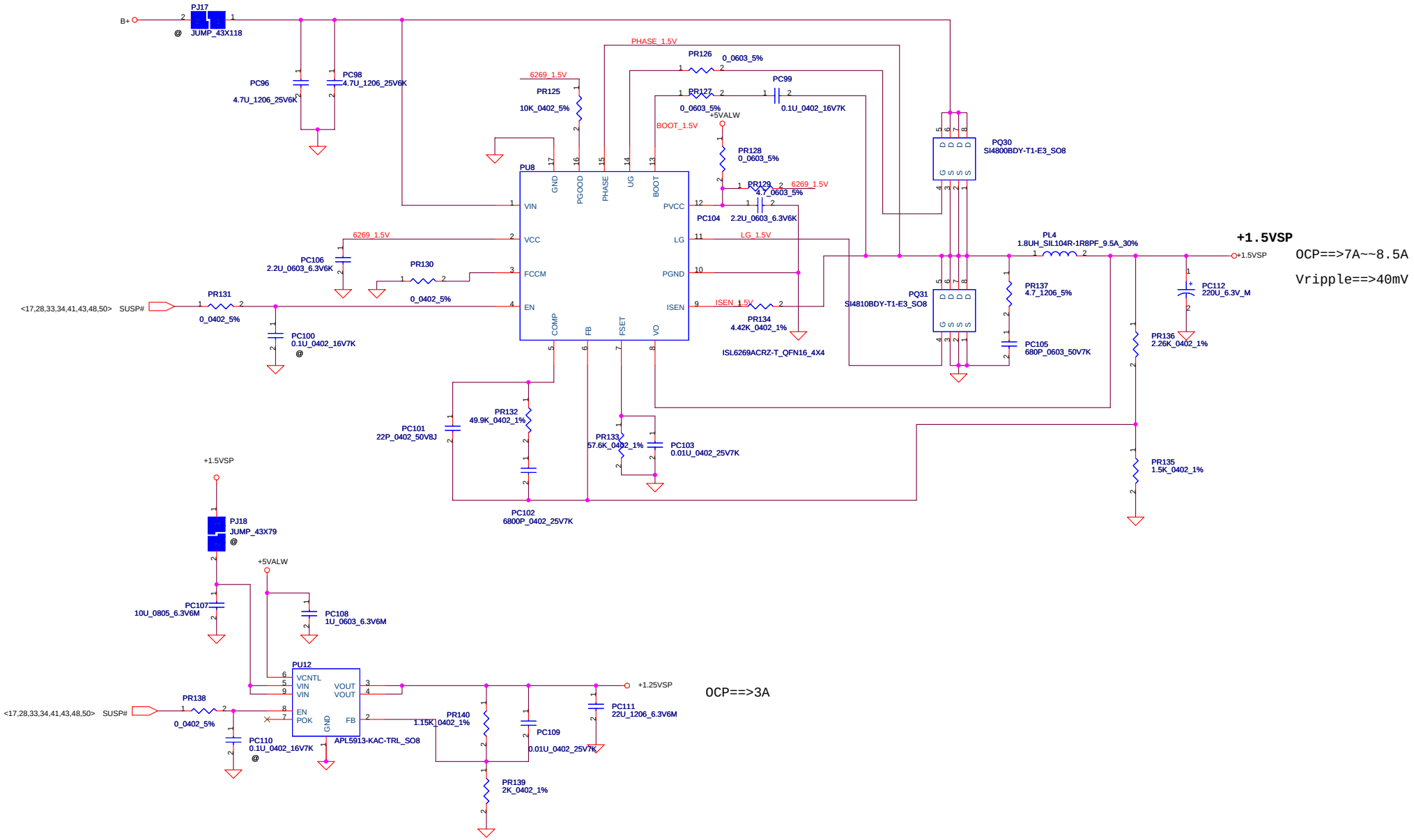

Security Classification	Compal Secret Data		
Issued Date	2005/10/17	Deciphered Date	2006/10/17

THIS SHEET OF ENGINEERING DRAWING IS THE PROPRIETARY PROPERTY OF COMPAL ELECTRONICS, INC. AND CONTAINS CONFIDENTIAL AND TRADE SECRET INFORMATION. THIS SHEET MAY NOT BE TRANSFERED FROM THE CUSTODY OF THE COMPETENT DIVISION OF R&D DEPARTMENT EXCEPT AS AUTHORIZED BY COMPAL ELECTRONICS, INC. NEITHER THIS SHEET NOR THE INFORMATION IT CONTAINS MAY BE USED BY OR DISCLOSED TO ANY THIRD PARTY WITHOUT PRIOR WRITTEN CONSENT OF COMPAL ELECTRONICS, INC.

Compal Electronics, Inc.

Title: 1.5VSP/1.25VP

Size: Custom | Document Number | Rev: 0.1

Date: Friday, February 16, 2007 | Sheet 49 of 52

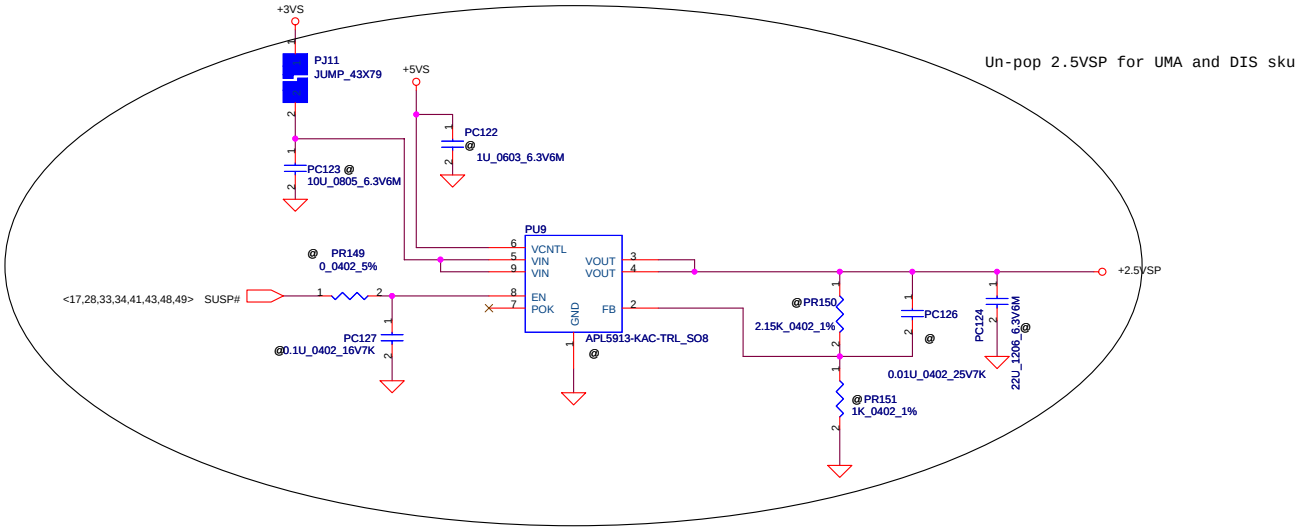

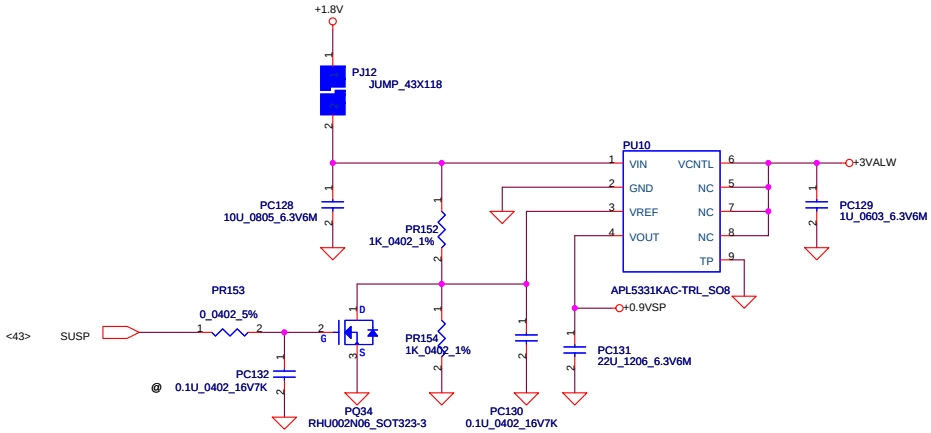

Security Classification	Compal Secret Data		
Issued Date	2005/10/17	Deciphered Date	2006/10/17

THIS SHEET OF ENGINEERING DRAWING IS THE PROPRIETARY PROPERTY OF COMPAL ELECTRONICS, INC. AND CONTAINS CONFIDENTIAL AND TRADE SECRET INFORMATION. THIS SHEET MAY NOT BE TRANSFERED FROM THE CUSTODY OF THE COMPETENT DIVISION OF R&D DEPARTMENT EXCEPT AS AUTHORIZED BY COMPAL ELECTRONICS, INC. NEITHER THIS SHEET NOR THE INFORMATION IT CONTAINS MAY BE USED BY OR DISCLOSED TO ANY THIRD PARTY WITHOUT PRIOR WRITTEN CONSENT OF COMPAL ELECTRONICS, INC.

Compal Electronics, Inc.

Title: **+2.5VSP/0.9VSP**

Size: Custom | Document Number: | Rev: 0.1

Date: Friday, February 16, 2007 | Sheet 50 of 52

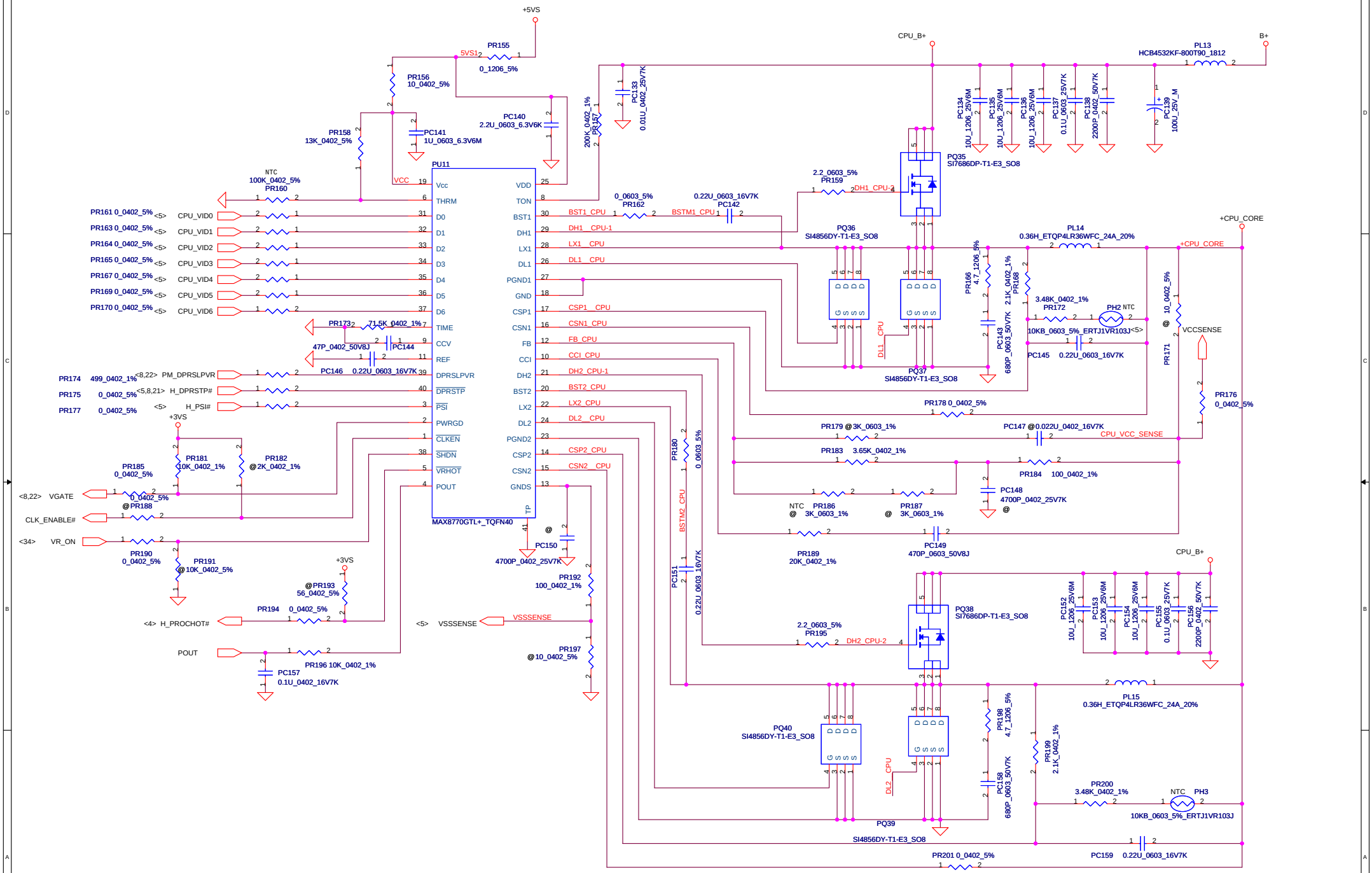

Security Classification	Compal Secret Data		
Issued Date	2005/10/17	Deciphered Date	2006/10/17

THIS SHEET OF ENGINEERING DRAWING IS THE PROPRIETARY PROPERTY OF COMPAL ELECTRONICS, INC. AND CONTAINS CONFIDENTIAL AND TRADE SECRET INFORMATION. THIS SHEET MAY NOT BE TRANSFERED FROM THE CUSTODY OF THE COMPETENT DIVISION OF R&D DEPARTMENT EXCEPT AS AUTHORIZED BY COMPAL ELECTRONICS, INC. NEITHER THIS SHEET NOR THE INFORMATION IT CONTAINS MAY BE USED BY OR DISCLOSED TO ANY THIRD PARTY WITHOUT PRIOR WRITTEN CONSENT OF COMPAL ELECTRONICS, INC.

Compal Electronics, Inc.

Title: **+CPU_CORE**

Size	Document Number	Rev
Custom		0.1

Date: Friday, February 16, 2007 | Sheet 51 of 52

	page	Reason for change	Modify list
Pre EVT	P50	For H/W 0.9V sequence deamd	Delete PQ34
		Modify Bead to Jump for costdown	PL1,PL2,PL4,PL7,PL10
		Modify 10UH/X6S to 10UH/X5R for common source	PC53,PC57,PC96,PC116,PC134,PC135,PC136,PC152,PC153,PC154
		Modify CH751H to RB751V for common source	PD10
DVT			
	95/12/28	Keep Batt_OVP to 1.5V	Change PR78 form 150K to 105K
		Take out PC148 & PC150 form VTT tool test	Delete PC148 &PC150
		Adjust PR183 to 39.2K for loadline	PR183
		Modify CPU_High side form SI7840 to SI7686 for vender shortage	PQ35,PQ38
		Modify PosCAP to Alu CAP for cost	PC63,PC87,PC99
		DFX footprint issue, Modify RLS4148_LLDS2 to LL34	PD2,PD4
		Add skip mode function form skip pin of 3/5V IC	PR203
		ADD Battery in function in page 45	PR204,PR205,PR206,PR207,PR208,PC51,PC52,PQ41
		Defence charger IC leakage current in page 46	PR57,PR209,PR210,PR211,PR212,PC118,PC97,PC56,PD16,PD17,PQ42,PQ43,PQ44
		ADD Battery in and DC-IN Bead	PL1,PL2
		ADD 100PF in SPOK PIN for noise but unpop	PC30
		ADD CPU high side gate resister 2.2 OHM for EMI demand	PR159,PR195
		Change PR137 to L/F	PR137
		Change PR95 form 6.81K to 6.49K for power loss	PR95
	96/01/03	Disable battery in function, EC control	PR204,PR205,PR206,PR207,PR208,PC51,PC52,PQ41
		Modify 0.01U_0402 to 1000P_0402	PC1,PC4
		Remove PR1 & PD1 for cost	PR1,PD1
		Modify AO4407 to FDS4435 for UMA cost	PQ10,PQ11,PQ9
		Modify RB751V to 1SS355 for cost	PD12,PD13,PD14,PD15,PD10
		Remove 2.5VSP function for UMA	PR149,PR150,PR151,PC122,PC123,PC124,PC126,PC127,PU9
		Change 1.05VSP High/Low side MOS for cost	PQ26,PQ27
		Change 0.9UH to 1.8uH for 1.05vsp cost	PL8
		Change PC72 330U/R9 to 330U/R15. and del PC88	PC72,PC88
		Add PR207 280K_0402 and delete PR202	PR207,PR202
		Modify PC139 for 100uH at 3000hurs	PC139
		Modify charge Low side gate to SI4800BDY	PQ19

Security Classification	Compal Secret Data		
Issued Date	2005/10/17	Deciphered Date	2006/10/17

THIS SHEET OF ENGINEERING DRAWING IS THE PROPRIETARY PROPERTY OF COMPAL ELECTRONICS, INC. AND CONTAINS CONFIDENTIAL AND TRADE SECRET INFORMATION. THIS SHEET MAY NOT BE TRANSFERED FROM THE CUSTODY OF THE COMPETENT DIVISION OF R&D DEPARTMENT EXCEPT AS AUTHORIZED BY COMPAL ELECTRONICS, INC. NEITHER THIS SHEET NOR THE INFORMATION IT CONTAINS MAY BE USED BY OR DISCLOSED TO ANY THIRD PARTY WITHOUT PRIOR WRITTEN CONSENT OF COMPAL ELECTRONICS, INC.

Compal Electronics, Inc.

Title: **Power PIR**

Size: Custom | Document Number | Rev: 0.1

Date: Friday, February 16, 2007 | Sheet 52 of 52

page	Reason for change	Modify list
96/01/03 DVT	Disable battery in function, EC control	PR204,PR205,PR206,PR207,PR208,PC51,PC52,PQ41
	Modify 0.01U_0402 to 1000P_0402 for common design	PC1,PC4
	Remove PR1 & PD1 for common design	PR1,PD1
	Modify AO4407 to FDS4435 for UMA	PQ10,PQ11,PQ9
	Modify RB751V to 1SS355 for common design	PD12,PD13,PD14,PD15,PD10
	Remove 2.5VSP function for UMA sku	PR149,PR150,PR151,PC122,PC123,PC124,PC126,PU9
	Change 1.05VSP High/Low side MOS for rating	PQ26(SI4800),PQ27(Si4810)
	Change 0.9UH to 1.8uH for 1.05vsp rating	PL8
	Change PC72 form 330U/R9 to 330U/R15. and del PC88 for rating	PC72,PC88
	Add PR107 280K_0402 and delete PR202 for 1.05VSP OCP	PR107,PR202
	Modify PC75 form 4700P to 3300P for 1.05VSP OCP	PC75
	Modify PC139 for 100uH at 3000hurs	PC139
	Modify charge Low MOS gate to SI4800BDY	PQ19
96/01/19 DVT-2	Disable CC-CV overshoot function , need verify it.	PQ44
	0.9V sequence for H/W deamd	Add PQ34
	Change CPU low side mos to SI4856	PQ36,PQ37,PQ39,PQ40
96/01/19 PVT	Chage 1.5V/1.25V dual to single and LDO portion	DEL PR141,PR143,PR144,PR145,PR146,PR148,PC110,PC113,PC114,PC115,PC116,PC117,PC120,PC121,PL11,PL12, PQ32,PQ33,PD14,PD15
		ADD PR125,PR126,PR136,PU12,PL4
		Modify PR128,PR129,PR130,PR131,PR132,PR133,PR134,PR135,PR136,PR137,PR138,PR139,PR140
		PC96,PC98,PC99,PC101,PC102,PC103,PC104,PC105,PC106,PC107,PC108,PC109,PC111,PC112
		PU8
	Combine PU5 LM358 and PU3 LM393	Del PU5,ADD PD8
	Change PD5 form RB751 to RLS4148 for cost	PD5
	Change 0.1U_0603 to 0.1U_0402 for cost	PC49,PC50,PC74,PC84,PC81
	Remove PC147 for cost	PC147
	Change PC128 form 10U_1206 to 10U_0805 for cost	PC128
96/02/16 PVT	Modify CPU OTP 85 degree C to 89 degree C for thermal request	PR42_78.7K, PR38_10K

Security Classification	Compal Secret Data		
Issued Date	2005/10/17	Deciphered Date	2006/10/17

THIS SHEET OF ENGINEERING DRAWING IS THE PROPRIETARY PROPERTY OF COMPAL ELECTRONICS, INC. AND CONTAINS CONFIDENTIAL AND TRADE SECRET INFORMATION. THIS SHEET MAY NOT BE TRANSFERED FROM THE CUSTODY OF THE COMPETENT DIVISION OF R&D DEPARTMENT EXCEPT AS AUTHORIZED BY COMPAL ELECTRONICS, INC. NEITHER THIS SHEET NOR THE INFORMATION IT CONTAINS MAY BE USED BY OR DISCLOSED TO ANY THIRD PARTY WITHOUT PRIOR WRITTEN CONSENT OF COMPAL ELECTRONICS, INC.

Compal Electronics, Inc.

Title: **Power PIR**

Size: Custom | Document Number | Rev: 0.1

Date: Friday, February 16, 2007 | Sheet 52 of 52

www.s-manuals.com